Contents

Vehicle Safety	P. 2
Operation Guide	P. 18
Maintenance	P. 35
Troubleshooting	P. 87
Information	P. 107
Specifications	P. 129
Index	P. 133

Welcome

Congratulations on your purchase of a new Honda vehicle. Your selection of a Honda makes you part of a worldwide family of satisfied customers who appreciate Honda's reputation for building quality into every product.

To ensure your safety and riding pleasure:

- Read this owner's manual carefully.
- Follow all recommendations and procedures contained in this manual.
- Pay close attention to safety messages contained in this manual and on the vehicle.

To protect your investment, we urge you to take responsibility for keeping your vehicle well serviced and maintained. Also, observe the break-in guidelines, and always perform the pre-ride inspection and other periodic checks in this manual.

When service is required, remember that your Honda dealer knows your vehicle best. If you have the required mechanical "know-how" and tools, you can purchase an official Honda Service Manual to help you perform many maintenance and repair tasks. ➔ P. 123
Read the warranty information thoroughly so that you understand the warranty coverage and that you are aware of your rights and responsibilities. ➔ P. 124
You may also want to visit our website at www.powersports.honda.com.
Canada www.honda.ca.
Happy riding!

A Few Words About Safety

Your safety, and the safety of others, is very important. Operating this vehicle safely is an important responsibility.
To help you make informed decisions about safety, we have provided operating procedures and other information on safety labels and in this manual. This information alerts you to potential hazards that could hurt you or others.
Of course, it is not practical or possible to warn you about all hazards associated with operating or maintaining a vehicle. You must use your own good judgment.

You will find important safety information in a variety of forms, including:

- Safety labels on the vehicle
- Safety Messages preceded by a safety alert symbol ⚠ and one of three signal words: DANGER, WARNING, or CAUTION.
  These signal words mean:

⚠DANGER

You WILL be KILLED or SERIOUSLY HURT if you don't follow instructions.

⚠WARNING

You CAN be KILLED or SERIOUSLY HURT if you don't follow instructions.

⚠CAUTION

You CAN be HURT if you don't follow instructions.

Other important information is provided under the following titles:

NOTICE Information to help you avoid damage to your vehicle, other property, or the environment.

Vehicle Safety

This section contains important information for safe riding of your vehicle.
Please read this section carefully.

Safety Guidelines ..... P. 3
Safety Labels ..... P. 7
Safety Precautions ..... P. 9
Riding Precautions ..... P. 11
Accessories & Modifications ..... P. 15
Off-Road Safety ..... P. 16
Loading ..... P. 17

Safety Guidelines

Follow these guidelines to enhance your safety:

- Perform all routine and regular inspections specified in this manual.
- Stop the engine and keep sparks and flame away before filling the fuel tank.
- Do not run the engine in enclosed or partly enclosed areas. Carbon monoxide in exhaust gases is toxic and can kill you.

Always Wear a Helmet

It's a proven fact: helmets and protective apparel significantly reduce the number and severity of head and other injuries. So always wear an approved helmet and protective apparel. ➡ P. 9

Before Riding

Make sure that you are physically fit, mentally focused and free of alcohol and drugs. Check that you and your passenger are both wearing an approved helmet and protective apparel. Instruct your passenger on holding onto the seat strap or your waist, leaning with you in turns, and keeping their feet on the footpegs, even when the vehicle is stopped.

Take Time to Learn & Practice

Even if you have ridden other vehicles, practice riding in a safe area to become familiar with how this vehicle works and handles, and to become accustomed to the vehicle's size and weight.

We recommend that all riders take a certified course approved by the Motorcycle Safety Foundation (MSF). New riders should start with the basic course, and even experienced riders will find the advanced course beneficial.

Continued

For information about the MSF training course nearest you, call the national toll-free number: (800) 446-9227.

USA Other riding tips can be found in the You and Your Motorcycle Riding Tips booklet that came with your vehicle.
Developing off-road riding skill is a gradual step-by step process. Start by practicing at low speeds in a safe area and slowly build your skills.
Ask your dealer if there are off-road riding groups in your area where you can learn from experienced riders. Also be sure to read Tips & Practice Guide for the Off-Highway Motorcyclist that came with your new vehicle.

Ride Defensively

Always pay attention to other vehicles around you, and do not assume that other drivers see you. Be prepared to stop quickly or perform an evasive maneuver.

Make Yourself Easy to See

Make yourself more visible, especially at night, by wearing bright reflective clothing, positioning yourself so other drivers can see you, signaling before turning or changing lanes, and using your horn when necessary.

Be Alert for Off-road Hazards

The terrain can be present a variety of challenges when you ride off-road.
Continually “read” the terrain for unexpected turns, drop-offs, rocks, ruts and other hazards.
Always keep your speed low enough to allow time to see and react to hazards.

Ride within Your Limits

Never ride beyond your personal abilities or faster than conditions warrant. Fatigue and inattention can impair your ability to use good judgment and ride safely.

Don't Drink and Ride

Alcohol and riding don't mix. Even one alcoholic drink can reduce your ability to respond to changing conditions, and your reaction time gets worse with every additional drink. Don't drink and ride, and don't let your friends drink and ride either.

Keep Your Honda in Safe Condition

It's important to keep your vehicle properly maintained and in safe riding condition. Having a breakdown can be difficult, especially if you are stranded off-road far from your base. Inspect your vehicle before every ride and perform all recommended maintenance. Never exceed load limits (➡ P. 17), and do not modify your vehicle or install accessories that would make your vehicle unsafe (➡ P. 15).

If You are Involved in a Crash

Personal safety is your first priority. If you or anyone else has been injured, take time to assess the severity of the injuries and whether it is safe to continue riding. Call for emergency assistance if needed. Also follow applicable laws and regulations if another person or vehicle is involved in the crash.

If you decide to continue riding, first turn the ignition switch to the OFF position, and evaluate the condition of your vehicle. Inspect for fluid leaks, check the tightness of critical nuts and bolts, and check the handlebar, control levers, brakes, and wheels. Ride slowly and cautiously.

Your vehicle may have suffered damage that is not immediately apparent. Have your vehicle thoroughly checked at a qualified service facility as soon as possible.

Continued

Carbon Monoxide Hazard

Exhaust contains poisonous carbon monoxide, a colorless, odorless gas. Breathing carbon monoxide can cause loss of consciousness and may lead to death.

If you run the engine in confined or even partly enclosed area, the air you breathe could contain a dangerous amount of carbon monoxide.
Never run your vehicle inside a garage or other enclosure.

⚠WARNING

Running the engine of your vehicle while in an enclosed or even partially enclosed area can cause a rapid build-up of toxic carbon monoxide gas.

Breathing this colorless, odorless gas can quickly cause unconsciousness and lead to death.

Only run your vehicle's engine when it is located in a well ventilated area outdoors.

Safety Labels

Safety and information labels on your vehicle provide important safety information and may warn you of potential hazards that could cause serious injury. Read these labels carefully and don't remove them.

If a label comes off or becomes hard to read, contact your dealer for a replacement.

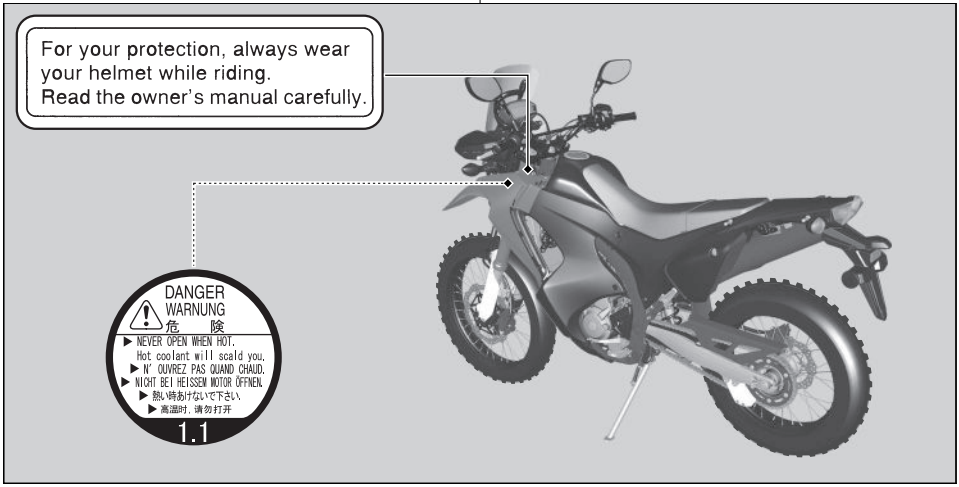

Continued

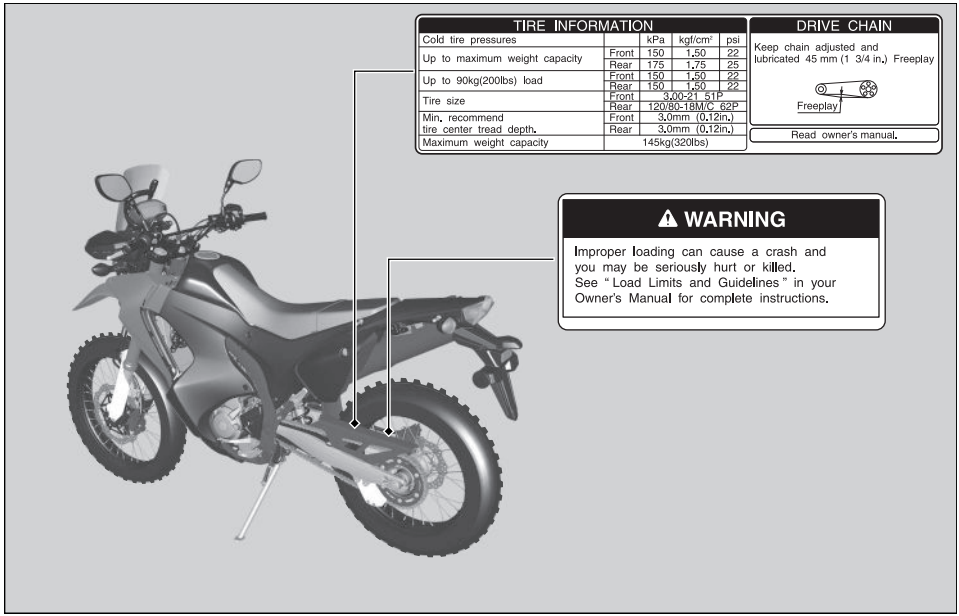
TIRE INFORMATION
Cold tire pressures
kPa
kgf/cm²
psi
Up to maximum weight capacity
Front 150 1.50 22
Rear 175 1.75 25
Up to 90kg(200lbs) load
Front 150 1.50 22
Rear 150 1.50 22
Tire size
Front 3.00-21 51P
Rear 120/80-18M/C 62P
Min. recommend tire center tread depth.
Front 3.0mm (0.12in.)
Rear 3.0mm (0.12in.)
Maximum weight capacity
145kg(320lbs)
DRIVE CHAIN
Keep chain adjusted and lubricated 45 mm (1 3/4 in.) Freeplay
Freeplay
Read owner's manual.
WARNING
Improper loading can cause a crash and you may be seriously hurt or killed.
See "Load Limits and Guidelines" in your Owner's Manual for complete instructions.

Safety Precautions

- Ride cautiously and keep your hands on the handlebar and feet on the footpegs.
- Keep passenger's hands onto the seat strap or your waist, passenger's feet on the footpegs while riding.
- Always consider the safety of your passenger, as well as other drivers and riders.

Protective Apparel

Make sure that you and any passenger are wearing an approved helmet, eye protection, and high-visibility protective clothing. Ride defensively in response to weather and road conditions.

Helmet

Should be safety-standard certified, high-visibility, and correct size for your head

- Must fit comfortably but securely, with the chin strap fastened.
- Face shield with unobstructed field of vision or other approved eye protection

USA Look for a DOT (Department of Transportation) certification label on any helmet you buy.

⚠WARNING

Not wearing a helmet increases the chance of serious injury or death in a crash.

Make sure that you and any passenger always wear an approved helmet and protective apparel.

Continued

Gloves

Full-finger leather gloves with high abrasion resistance

Boots or Riding Shoes

Sturdy boots with non-slip soles and ankle protection

Jacket and Pants

Protective, highly visible, long-sleeved jacket and durable long pants for riding (or a protective suit)

Additional Off-road Gear

On-road apparel may also be suitable for casual off-road riding. But if you plan on any serious off-road riding you will need more serious off-road gear. In addition to your helmet and eye protection, we recommend off-road motorcycle boots and gloves, riding pants with knee and hip pads, a jersey with elbow pads, and a chest/shoulder protector.

Riding Precautions

Break-in Period

During the first 300 miles (500 km) of running, follow these guidelines to ensure your vehicle's future reliability and performance.

- Avoid full-throttle starts and rapid acceleration.
- Avoid hard braking and rapid down-shifts.
- Ride conservatively.

Brakes

Observe the following guidelines:

- Avoid excessively hard braking and downshifting.
  - ▶ Sudden braking can reduce the vehicle's stability.
  - ▶ Where possible, reduce speed before turning; otherwise you risk sliding out.
- Exercise caution on low traction surfaces.
  - ▶ The tires slip more easily on such surfaces and braking distances are longer.
- Avoid continuous braking.
  - ▶ Repeated braking, such as when descending long, steep slopes can seriously overheat the brakes, reducing their effectiveness. Use engine braking with intermittent use of the brakes to reduce speed.
- For full braking effectiveness, operate both the front and rear brakes together.

Continued

Anti-lock Brake System (ABS)

CRF250RLA

This model is equipped with an Anti-lock Brake System (ABS) designed to help prevent the brakes from locking up during hard braking.

- ABS does not reduce braking distance. In certain circumstances, ABS may result in a longer stopping distance.
- ABS does not function at speeds below 6 mph (10 km/h).
- The brake lever and pedal may recoil slightly when applying the brakes. This is normal.
- Always use the recommended front/rear tires and sprockets to ensure correct ABS operation.

Engine Braking

Engine braking helps slow your vehicle down when you release the throttle. For further slowing action, downshift to a lower gear. Use engine braking with intermittent use of the brakes to reduce speed when descending long, steep slopes.

Wet or Rainy Conditions

Road surfaces are slippery when wet, and wet brakes further reduce braking efficiency. Exercise extra caution when braking in wet conditions.

If the brakes get wet, apply the brakes while riding at low speed to help them dry.

Parking

- Park on a firm, level surface.
- If you must park on a slight incline or loose surface, park so that the vehicle cannot move or fall over.
- Make sure that high-temperature parts cannot come into contact with flammable materials.
- Do not touch the engine, muffler, brakes and other high-temperature parts until they cool down.
- To reduce the likelihood of theft, always lock the handlebar and remove the key when leaving the vehicle unattended.
  Use of an anti-theft device is also recommended.

Parking with the Side Stand

1. Stop the engine.
2. Push the side stand down.
3. Slowly lean the vehicle to the left until its weight rests on the side stand.
4. Turn the handlebar fully to the left.
   ▶ Turning the handlebar to the right reduces stability and may cause the vehicle to fall.
5. Turn the ignition switch to the LOCK position and remove the key. ➔ P. 28

Continued

Refueling and Fuel Guidelines

Follow these guidelines to protect the engine, fuel system and catalytic converter:

- Use only unleaded gasoline.
- Use recommended octane number. Using lower octane gasoline will result in decreased engine performance.
- Do not use fuels containing a high concentration of alcohol. ➡ P. 122
- Do not use stale or contaminated gasoline or an oil/gasoline mixture.
- Avoid getting dirt or water in the fuel tank.

Accessories & Modifications

We strongly advise that you do not add any accessories that were not specifically designed or approved for your vehicle by Honda or make modifications to your vehicle from its original design. Doing so can make it unsafe. Modifying your vehicle may also void your warranty and make your vehicle illegal to operate on public roads. Before deciding to install accessories on your vehicle be certain the modification is safe and legal.

⚠WARNING

Improper accessories or modifications can cause a crash in which you can be seriously hurt or killed.

Follow all instructions in this owner's manual regarding accessories and modifications.

Do not pull a trailer with, or attach a sidecar to, your vehicle. Your vehicle was not designed for these attachments, and their use can seriously impair your vehicle's handling.

Off-Road Safety

Learn to ride in an uncongested off-road area free of obstacles before venturing onto unfamiliar terrain.

- Always obey local off-road riding laws and regulations.
- Obtain permission to ride on private property. Avoid posted areas and obey “NO Trespassing” signs.
- Ride with a friend on another vehicle so that you can assist each other in case of trouble.
- Familiarity with your vehicle is critically important should a problem occur far from help.
- Never ride beyond your ability and experience or faster than conditions warrant.
- If you are not familiar with the terrain, ride cautiously. Hidden rocks, holes, or ravines could spell disaster.
- A muffler is required in most off-road areas. Don't modify your exhaust system. Remember that excessive noise bothers everyone and creates a bad image for motorcycling.

Loading

- Carrying extra weight affects your vehicle's handling, braking and stability.
  Always ride at a safe speed for the load you are carrying.
- Avoid carrying an excessive load and keep within specified load limits.
  Maximum weight capacity ➡ P. 129
- Tie all luggage securely, evenly balanced and close to the center of the vehicle.
- Do not place objects near the lights or the muffler.

Also follow these guidelines when you ride off-road on rough terrain:

- Do not carry a passenger.
- Keep cargo small and light weight.
  Make sure it cannot easily be caught on brush or other objects, and that it does not interfere with your ability to shift position to maintain balance and stability.

⚠WARNING

Overloading or improper loading can cause a crash and you can be seriously hurt or killed.

Follow all load limits and other loading guidelines in this manual.

Parts Location

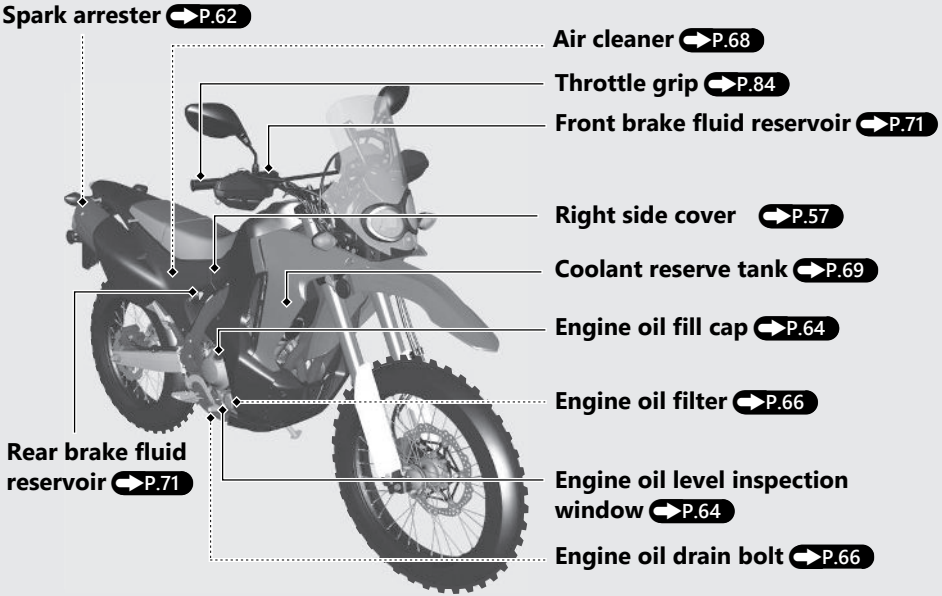

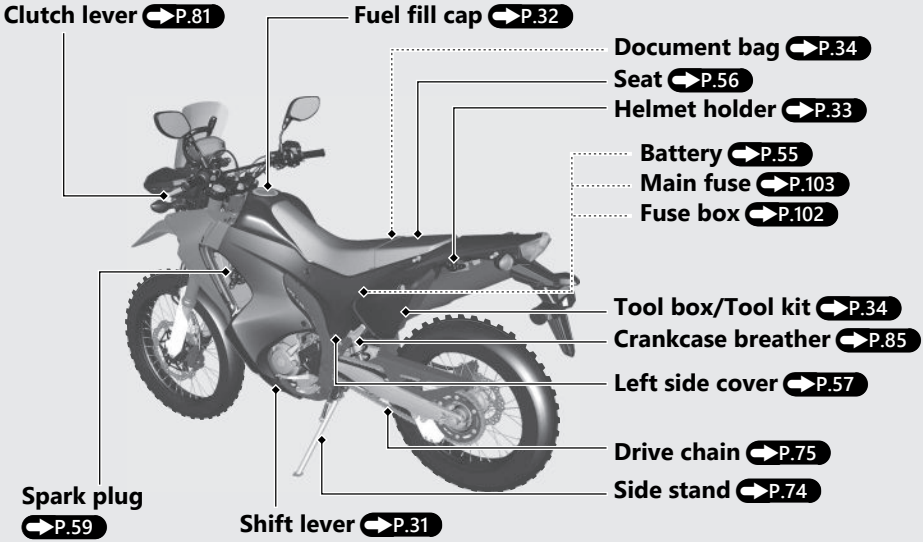
Clutch lever P.81
Fuel fill cap P.32
Document bag P.34
Seat P.56
Helmet holder P.33
Battery P.55
Main fuse P.103
Fuse box P.102
Tool box/Tool kit P.34
Crankcase breather P.85
Left side cover P.57
Drive chain P.75
Side stand P.74
Spark plug P.59
Shift lever P.31

Instruments

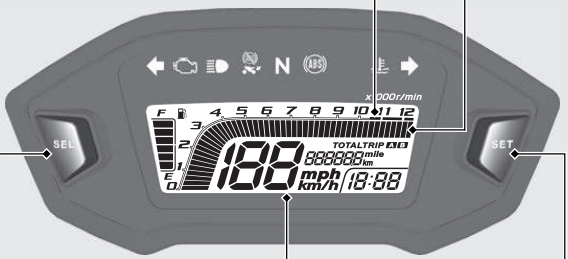

Tachometer red zone
(excessive engine rpm range)

Tachometer

NOTICE
Do not operate the engine in the tachometer red zone. Excessive engine speed can adversely affect engine life.

SEL button

SET button

Display Check
When the ignition switch is turned to the ON position, all the mode and digital segments will show. If any part of these displays does not come on when it should, have your dealer check for problems.

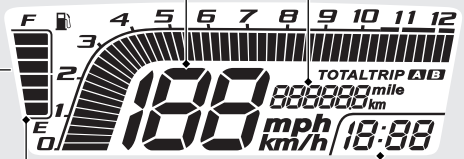

Speedometer

Odometer [TOTAL] & Tripmeter[TRIP A/B]

SEL button switches between the odometer and tripmeters.

- Odometer: Total distance ridden.
  When "------" is displayed, go to your dealer for service.
- Tripmeter: Distance ridden since tripmeter was reset (press and hold SET button to reset to 0.0 km/mile at the tripmeter display).
  When "----.-" is displayed, go to your dealer for service.

Clock (12-hour display)

Fuel gauge

Remaining fuel when only 1st (E) segment starts flashing:
approximately 0.42 US gal (1.6 L)

If the fuel gauge indicator flashes in a repeat pattern or turns off: P.91

Instruments *(Continued)*

1 To set the clock:

1. Turn the ignition switch to the ON position.
2. Press and hold the SEL button and the SET button until the hour digits start flashing.

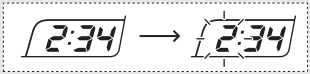

3. Press the SEL button until the desired hour is displayed.
   ▶ Press and hold to advance the hour fast.

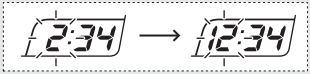

4. Press the SET button. The minute digits start flashing.

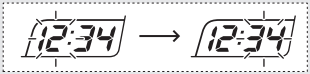

5. Press the SEL button until the desired minute is displayed.
   ▶ Press and hold to advance the minute fast.

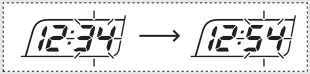

6 Press the SET button. The clock is set, and then the display moves to the changing of the speed and mileage unit.

▶ The adjustment can also be set by turning the ignition switch to the OFF position.

If no buttons were pressed for about 30 seconds, the display will stop flashing automatically and the adjustment will be cancelled.

2 Changing the speed and mileage unit:

1 Press the SEL button to select either “km/h” & “km” or “mph” & “mile” for the speedometer, odometer and tripmeters.

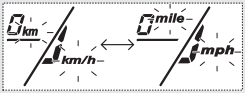

2 Press the SET button. The speed and mileage unit is set, and then the display will return to the ordinary display.

Indicators

If one of these indicators does not come on when it should, have your dealer check for problems.

Rear ABS (Anti-lock Brake System) OFF indicator CRF250RLA

Comes on briefly when the ignition switch is turned to the ON position.
Comes on when the ABS function on the rear wheel is turned off.

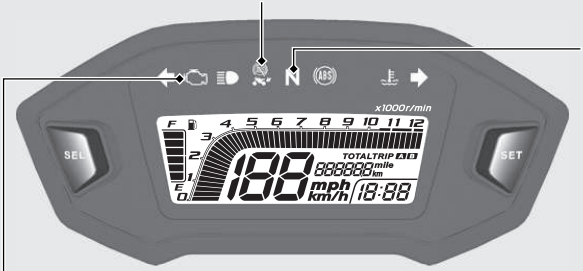

Neutral indicator
Comes on when the transmission is in Neutral.

PGM-FI (Programmed Fuel Injection) malfunction indicator lamp (MIL)
Comes on briefly when the ignition switch is turned to the ON position with the engine stop switch in the (Run) position.
If it comes on while engine is running: P.90

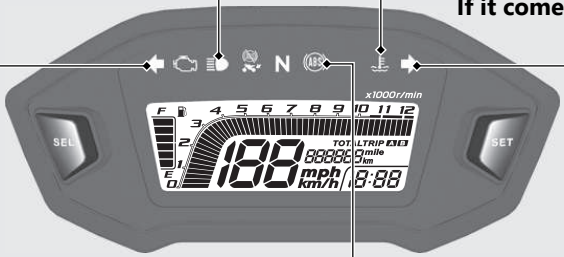

High beam indicator

High coolant temperature indicator
Comes on briefly when the ignition switch is turned to the ON position with the engine stop switch in the (Run) position.
If it comes on while running: P.89

Left turn signal indicator

Right turn signal indicator

ABS (Anti-lock Brake System) indicator CRF250RLA
Comes on when the ignition switch is turned to the ON position.
Goes off when your speed reaches approximately 6 mph (10 km/h).
If it comes on while riding: P.90

Switches

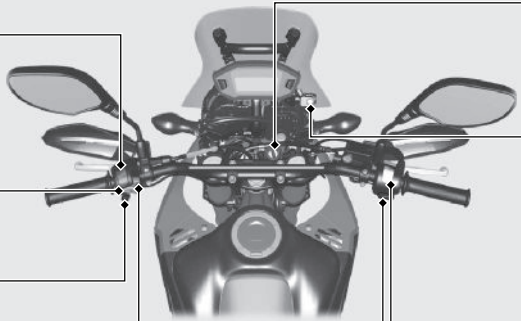

Headlight dimmer switch

- : High beam
- : Low beam

Horn button

Turn signal switch

▶ Pressing the switch turns the turn signal off.

Hazard switch

Switchable when the ignition switch is turned to the ON position.

Ignition switch

Switches the electrical system on/off, locks the steering.

▶ Key can be removed when in the OFF or LOCK position.

Steering Lock: P.28

ON
Turns electrical system on for starting/riding.

OFF
Turns engine off.

LOCK
Locks steering.

Rear ABS switch CRF250RLA

Switches the ABS function on the rear wheel on/off. P.29

Engine stop switch

Should normally remain in the (Run) position.

▶ In an emergency, switch to the (Stop) position (the starter motor will not operate) to stop the engine.

Start button

Switches *(Continued)*

Steering Lock

Lock the steering when parking to help prevent theft.
A U-shaped wheel lock or similar device is also recommended.

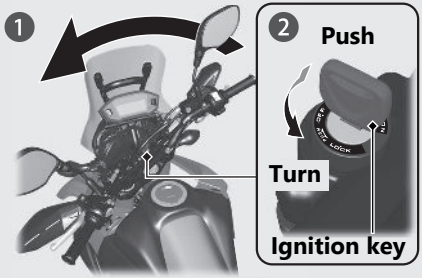

Locking

1. Turn the handlebar all the way to the left.
2. Push the key down, and turn the ignition switch to the LOCK position.
   ► Jiggle the handlebar if the lock is difficult to engage.
3. Remove the key.

Unlocking

Insert the key, push it in, and turn the ignition switch to the OFF position.

ABS function on the rear wheel

CRF250RLA

The ABS function on the rear wheel can be optionally turned off for off-road riding.

▶ Each time the ignition switch is turned to the ON position, the ABS function on both wheels will automatically be turned on.

To turn off the ABS function on the rear wheel

1. Stop the vehicle.
2. Press and hold the rear ABS switch until the rear ABS OFF indicator starts flashing, then release the switch while the indicator is flashing.
   - ▶ The rear ABS OFF indicator is on, when the ABS function on the rear wheel is turned off.
   - ▶ The ABS function on the rear wheel remains on, if the switch is released after indicator stops flashing.

To turn on the ABS function on both wheels

1. Stop the vehicle.
2. Press and hold the rear ABS switch until the rear ABS OFF indicator is turned off, or turn the ignition switch to the OFF position and the ON position.

ABS function on both wheels is on.

ABS function on rear wheel is off.

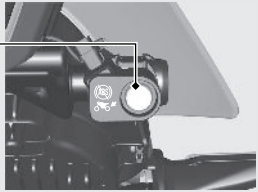

Starting the Engine

Start your engine using the following procedure, regardless of whether the engine is cold or warm.

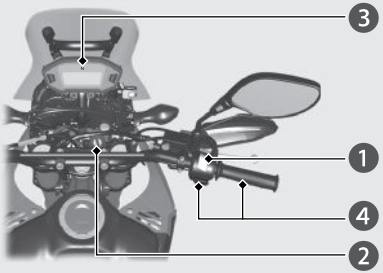

NOTICE

- If the engine does not start within 5 seconds, turn the ignition switch to the OFF position and wait 10 seconds before trying to start the engine again to recover battery voltage.
- Extended fast idling and revving the engine can damage the engine, and the exhaust system.
- The engine will not start if the throttle is fully open.

1. Make sure the engine stop switch is in the ◯ (Run) position.
2. Turn the ignition switch to the ON position.
3. Shift the transmission to Neutral (N indicator to come on). Alternatively, pull in the clutch lever to start your vehicle with the transmission in gear so long as the side stand is raised.
4. Press the start button with the throttle completely closed.

If the engine does not start:

① Open the throttle fully and press the start button for 5 seconds.
② Repeat the normal starting procedure.
③ If the engine starts, open the throttle slightly if idling is unstable.
④ If the engine does not start, wait 10 seconds before trying steps ① & ② again.

If Engine Will Not Start P.88

Shifting Gears

Your vehicle transmission has 6 forward gears in a one-down, five-up shift pattern.

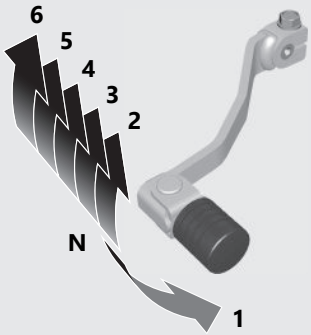

If you put the vehicle in gear with the side stand down, the engine will shut off.

Recommended Shift Points

Shifting Up	
From 1st to 2nd	12 mph (20 km/h)
From 2nd to 3rd	19 mph (30 km/h)
From 3rd to 4th	25 mph (40 km/h)
From 4th to 5th	31 mph (50 km/h)
From 5th to 6th	37 mph (60 km/h)

Shifting Down	
From 6th to 5th	28 mph (45 km/h)
From 5th to 4th	22 mph (35 km/h)
From 4th to 3rd	16 mph (25 km/h)

NOTICE

Improper shifting can damage the engine, transmission, and drive train. Also, coasting or towing the vehicle for long distances with the engine off can damage the transmission.

Refueling

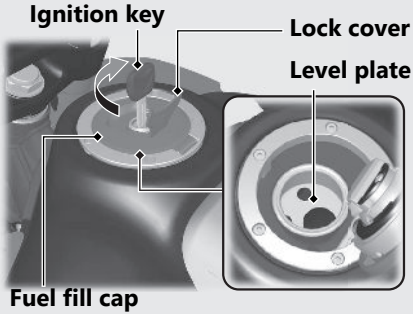

Do not fill with fuel above the level plate.
Fuel type: Unleaded gasoline only
Recommended fuel octane number: Pump Octane Number (PON) 86 or higher.
Tank capacity: 2.67 US gal (10.1 L)

Refueling and Fuel Guidelines P.14

Opening the Fuel Fill Cap

Open the lock cover, insert the ignition key, and turn it clockwise to open the fuel fill cap.

Closing the Fuel Fill Cap

1. After refueling, push the fuel fill cap closed until it locks.
2. Remove the key and close the lock cover.
   ▶ The key cannot be removed if the fuel fill cap is not locked.

⚠WARNING

Gasoline is highly flammable and explosive. You can be burned or seriously injured when handling fuel.

- Stop the engine, and keep heat, sparks, and flame away.
- Handle fuel only outdoors.
- Wipe up spills immediately.

Storage Equipment

Helmet Holder

The helmet holder is located on the left side of the vehicle.
When hanging two helmets, use the helmet set wire.

▶ The helmet set wire is in the tool kit. ➡P.34

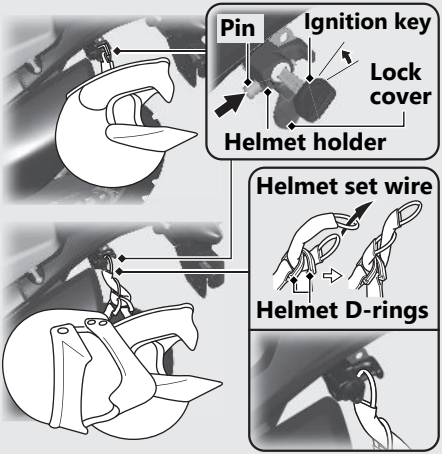

Unlocking

Open the lock cover, insert the ignition key and turn it counterclockwise.

Locking

1. Hang your helmet on the holder pin and push it in to lock.
2. Remove the key and close the lock cover.
   ▶ Use the helmet holder only when parked.

⚠WARNING

Riding with a helmet attached to the holder can interfere with the rear wheel or suspension and could cause a crash in which you can be seriously hurt or killed.

Use the helmet holder only while parked. Do not ride with a helmet secured by the holder.

Continued

Storage Equipment *(Continued)*

Document Bag

The document bag is located under the seat.

Removing the Seat P.56

Tool Kit

The tool kit is stored in the tool box located on the left side of the vehicle.

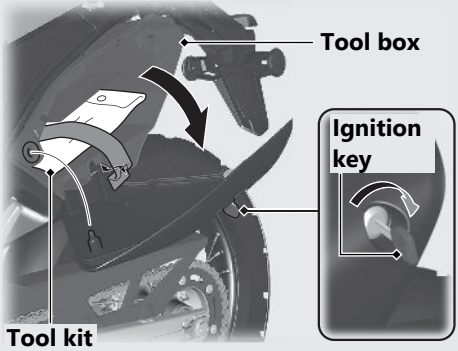

▶ Insert the ignition key and turn it clockwise to open the tool box.

Maintenance

Please read “Importance of Maintenance” and “Maintenance Fundamentals” carefully before attempting any maintenance. Refer to “Specifications” for service data.
An optional larger tool kit may be available.
Check with your Honda dealer's parts department.

Importance of Maintenance ..... P. 36
Maintenance Schedule ..... P. 38
Maintenance Record ..... P. 41
Maintenance Fundamentals ..... P. 42
Removing & Installing Body Components .. P. 55
- Battery ..... P. 55
- Seat ..... P. 56
- Side Cover ..... P. 57
- Under Cowl ..... P. 58

Spark Plug ..... P. 59
Spark Arrester ..... P. 62
Engine Oil ..... P. 64
Air Cleaner ..... P. 68
Coolant ..... P. 69
Brakes ..... P. 71
Side Stand ..... P. 74
Drive Chain ..... P. 75
Wheels ..... P. 80
Clutch ..... P. 81
Throttle ..... P. 84
Crankcase Breather ..... P. 85
Other Adjustments ..... P. 86
- Adjusting the Headlight Aim ..... P. 86

Importance of Maintenance

Keeping your vehicle well-maintained is absolutely essential to your safety and to protect your investment, obtain maximum performance, avoid breakdowns, and reduce air pollution. Maintenance is the owner's responsibility. Be sure to inspect your vehicle before each ride, and perform the periodic checks specified in the Maintenance Schedule. ➔ P. 38

⚠WARNING

Improperly maintaining your vehicle or failing to correct a problem before you ride can cause a crash in which you can be seriously hurt or killed.

Always follow the inspection and maintenance recommendations and schedules in this owner's manual.

For information about the exhaust emission and noise emission requirements of the U.S. Environmental Protection Agency (EPA), the California Air Resources Board (CARB), and the Environment and Climate Change Canada (ECCC). ➔ P. 117

USA

Maintenance, replacement or repair of the emission control devices and systems may be performed by any vehicle repair establishment or individual using parts that are "certified" to EPA standards.

Maintenance Safety

Always read the maintenance instructions before you begin each task, and make sure that you have the tools, parts, and skills required. We cannot warn you of every conceivable hazard that can arise in performing maintenance. Only you can decide whether or not you should perform a given task.

Follow these guidelines when performing maintenance.

- Stop the engine and remove the key.
- Place your vehicle on a firm, level surface using the side stand to provide support.
- Allow the engine, muffler, brakes, and other high-temperature parts to cool before servicing as you can get burned.
- Run the engine only when instructed, and do so in a well-ventilated area.

Maintenance Schedule

The maintenance schedule specifies the maintenance requirements necessary to ensure safe, dependable performance, and proper emission control.

Maintenance work should be performed in accordance with Honda's standards and specifications by properly trained and equipped technicians. Your dealer meets all of these requirements. All scheduled maintenance is considered a normal owner operating cost and will be charged to you by your dealer. Keeping an accurate maintenance record will help ensure your vehicle is properly maintained.
➔ P. 41

Make sure whoever performs the scheduled maintenance completes the maintenance record. Retain all service documents. If you sell your vehicle, these service documents should be transferred with the vehicle to the new owner.

	Items		Frequency*1								Regular Replace	Refer to page
			× 1,000 mi	0.6	4	8	12	16	20	24		
			× 1,000 km	1.0	6.4	12.8	19.2	25.6	32.0	38.4		
Emission-related Items	Fuel Line	🔧				I		I		I		–
	Throttle Operation	🔧				I		I		I		84
	Air Cleaner*2						R			R		54, 68
	Crankcase Breather*3				C	C	C	C	C	C		85
	Spark Plug		Every 16,000 mi (25,600 km): I Every 32,000 mi (51,200 km): R									59
	Valve Clearance	🔧						I				–
	Engine Oil			R		R		R		R	1 Year	66
	Engine Oil Filter			R				R				66
	Engine Idle Speed	🔧				I		I		I		–
	Radiator Coolant*7					I		I		I	3 Years	69
	Cooling System	🔧				I		I		I		–
	Secondary Air Supply System	🔧						I				–
	Evaporative Emission Control System*4	🔧						I				–

Maintenance Level

🔧 : Intermediate. We recommend service by your dealer, unless you have the necessary tools and are mechanically skilled.
Procedures are provided in an official Honda Service Manual (▶ P. 123).

🔧 : Technical. In the interest of safety, have your vehicle serviced by your dealer.

Maintenance Legend

I : Inspect (clean, adjust, lubricate, or replace, if necessary)
L : Lubricate
R : Replace
C : Clean

Continued

	Items		Frequency*1								Regular Replace	Refer to page
			× 1,000 mi	0.6	4	8	12	16	20	24		
			× 1,000 km	1.0	6.4	12.8	19.2	25.6	32.0	38.4		
Non-Emission-Related Items	Drive Chain*5		Every 600 mi (1,000 km): I L									75
	Drive Chain Slider				I	I	I	I	I	I		79
	Brake Fluid*7				I	I	I	I	I	I	2 Years	71
	Brake Pads Wear				I	I	I	I	I	I		72
	Brake System					I		I		I		42
	Brake light Switch					I		I		I		73
	Headlight Aim					I		I		I		86
	Clutch System				I	I	I	I	I	I		81
	Side Stand					I		I		I		74
	Suspension					I		I		I		–
	Spark Arrester*6				C	C	C	C	C	C		62
	Nuts, Bolts, Fasteners*5					I		I		I		–
	Wheels/Tires*5				I	I	I	I	I	I		52, 80
	Steering Head Bearings					I		I		I		–

Notes:

*1 : At higher odometer reading, repeat at the frequency interval established here.

*2 : Service more frequently when riding in unusually wet or dusty areas.

*3 : Service more frequently when riding in rain or at full throttle.

*4 : 50 STATE (meets California)

*5 : Service more frequently when riding OFF-ROAD.

*6 : USA only.

*7 : Replacement requires mechanical skill.

Maintenance Record

Distance	Odometer	Date	Performed By:	Notes
600 miles (1,000 km)				
4,000 miles (6,400 km)				
8,000 miles (12,800 km)				
12,000 miles (19,200 km)				
16,000 miles (25,600 km)				
20,000 miles (32,000 km)				
24,000 miles (38,400 km)				
28,000 miles (44,800 km)				
32,000 miles (51,200 km)				
36,000 miles (57,600 km)				
40,000 miles (64,000 km)				
44,000 miles (70,400 km)				
48,000 miles (76,800 km)				
52,000 miles (83,200 km)				
56,000 miles (89,600 km)				
60,000 miles (96,000 km)				
64,000 miles (102,400 km)				
68,000 miles (108,800 km)				

Pre-ride Inspection

To ensure safety, it is your responsibility to perform a pre-ride inspection and make sure that any problem you find is corrected. A pre-ride inspection is a must, not only for safety, but because having a breakdown, or even a flat tire, can be a major inconvenience.

Before riding on-road, or returning to pavement after riding off-road, take a few moments to walk around your vehicle and look for any loose parts or anything that appears unusual.
Also check the following.

- Tire tread wear and air pressures are within limits. ➔ P. 52
- Lights, horn, and turn signals operate normally.
- Check the condition of the drive chain. Adjust slack and lubricate as needed. ➔ P. 50

Check the following items if you are carrying a passenger or cargo:

- Combined weight is within load limits. ➔ P. 129
- Cargo is secured properly.

Check the following items after you get on your vehicle:

- Throttle action moves smoothly without binding. ➔ P. 84
- Brake lever and pedal operate normally.
- Check the fuel level and refuel when needed. ➔ P. 14, ➔ P. 32
- Engine stop switch functions properly. ➔ P. 26

Check the following items at regular intervals:

- Oil level is between the upper and lower level marks. ➔ P. 64
- Brake fluid level is
  Front: above the LOWER level mark. ➔ P. 71
  Rear: between the UPPER and LOWER level marks. ➔ P. 71
- Engine coolant level is between the UPPER and LOWER level marks. ➔ P. 69
- Side stand functions properly. ➔ P. 74

Before riding off-road check all of the preceding plus the following:

- Make sure spokes are tight. Check the rims for any damage. ➔ P. 80
- Oil level is between the upper and lower marks. ➔ P. 64
- Check the fuel level and refuel when needed. ➔ P. 14, ➔ P. 32
- Be sure the fuel fill cap is securely fastened. ➔ P. 32
- Clutch lever operates smoothly. Adjust freeplay if necessary. ➔ P. 81
- Check for loose cables and other parts, and anything that appears abnormal.
- Use a wrench to check the tightness of all accessible nuts, bolts and fasteners.

Periodic Checks

You should also perform other periodic maintenance checks at least once a month regardless of how often you ride, or more often if you ride frequently.

Also, check the odometer reading against the Maintenance Schedule and perform all maintenance that is due. ➔ P. 38

Tires and wheels	Check the air pressure (➔ P. 52), examine tread for wear and damage (➔ P. 52), and check the wheels for damage.
Fluid levels	Check the engine oil level (➔ P. 64), engine coolant level (➔ P. 69), and brake fluid level (➔ P. 71).
Lights	Check that the headlight, brake light, taillight, turn signals and license plate light are working properly.
Controls	Check the freeplay of the clutch lever (➔ P. 81) and throttle grip (➔ P. 84).
Drive chain	Check the slack (➔ P. 75), adjust the slack (➔ P. 76), and lubricate (➔ P. 51) as needed.
Fuses	Check that you have a full supply of spare fuses.
Nuts & bolts	Check the major nuts and bolts, and tighten as needed.
Crankcase Breather	Service the crankcase breather more frequently if your vehicle is ridden in the rain or often at full throttle. Service the breather if you can see deposits in the transparent section of the drain tube (➔ P. 85).

Replacing Parts

Always use Honda Genuine Parts or their equivalents to ensure reliability and safety.
When ordering colored components, specify the model name, color, and code mentioned on the color label.
The color label is attached to the left side of the front frame.

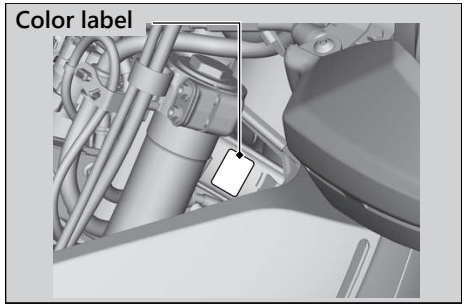

⚠WARNING

Installing non-Honda parts may make your vehicle unsafe and cause a crash in which you can be seriously hurt or killed.

Always use Honda Genuine Parts or equivalents that have been designed and approved for your vehicle.

Battery

Your vehicle has a maintenance-free type battery. You do not have to check the battery electrolyte level or add distilled water. Clean the battery terminals if they become dirty or corroded.
Do not remove the battery cap seals. There is no need to remove the cap when charging.

NOTICE
An improperly disposed of battery can be harmful to the environment and human health. Always confirm local regulations for proper battery disposal instruction.

What to do in an emergency

If any of the following occur, immediately see your doctor.

- Electrolyte splashes into your eyes:
  ▶ Wash your eyes repeatedly with cool water for at least 15 minutes. Using water under pressure can damage your eyes.
- Electrolyte splashes onto your skin:
  ▶ Remove affected clothing and wash your skin thoroughly using water.
- Electrolyte splashes into your mouth:
  ▶ Rinse mouth thoroughly with water, and do not swallow.

⚠WARNING

The battery gives off explosive hydrogen gas during normal operation.

A spark or flame can cause the battery to explode with enough force to kill or seriously hurt you.

Wear protective clothing and a face shield, or have a skilled mechanic do the battery servicing.

WARNING: Battery posts, terminals, and related accessories contain lead and lead compounds. **Wash your hands after handling.**

Cleaning the Battery Terminals

1. Remove the battery. ➡ P. 55
2. If the terminals are starting to corrode and are coated with a white substance, wash with warm water and wipe clean.
3. If the terminals are heavily corroded, clean and polish the terminals with a wire brush or sandpaper. Wear safety glasses.

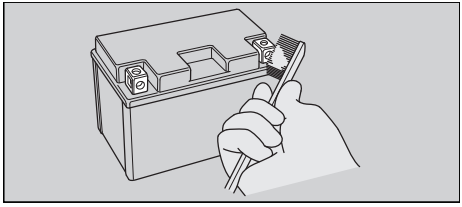

4. After cleaning, reinstall the battery.

The battery has a limited life span. Consult your dealer about when you should replace the battery. Always replace the battery with another maintenance-free battery of the same type.

Charging

If you use electrical accessories that drain the battery or you do not ride frequently, we recommend that you charge the battery every 30 days using a charger designed specifically for your Honda, which can be purchased from your dealer. Read the information that came with your battery charger and follow the instructions on the battery. Avoid using an automobile-type battery charger, as these can overheat a motorcycle battery and cause permanent damage.

Make sure the ignition switch is in the OFF position before charging the battery.

NOTICE

Improper charging can damage the battery. If you can't charge the battery or it appears unable to hold a charge, contact your dealer.

Continued

NOTICE
Jump starting using an automobile battery can damage your vehicle's electrical system and is not recommended. Bump starting is also not recommended.

NOTICE
Installing non-Honda electrical accessories can overload the electrical system, discharging the battery and possibly damaging the system.

Fuses

Fuses protect the electrical circuits on your vehicle. If something electrical on your vehicle stops working, check for and replace any blown fuses. ➡ P. 102

Inspecting and Replacing Fuses

Turn the ignition switch to the OFF position to remove and inspect fuses. If a fuse is blown, replace with a fuse of the same rating. For fuse ratings, see “Specifications.” ➡ P. 131

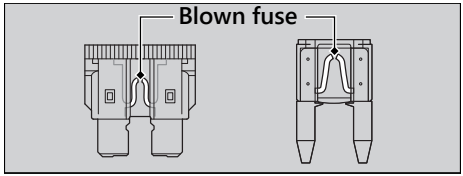

NOTICE
Replacing a fuse with one that has a higher rating greatly increases the chance of damage to the electrical system.

If a fuse fails repeatedly, you likely have an electrical fault. Have your vehicle inspected by your dealer.

Engine Oil

Engine oil consumption varies and oil quality deteriorates according to riding conditions and time elapsed.
Check the engine oil level regularly, and add the recommended engine oil if necessary. Dirty oil or old oil should be changed as soon as possible.

Selecting the Engine Oil

For recommended engine oil, see "Specifications." ➡ P. 130

If you use non-Honda engine oil, check the label to make sure that the oil satisfies all of the following standards:

- JASO T 903 standard*1: MA
- SAE standard*2: 10W-30
- API classification*3: SG or higher

*1. The JASO T 903 standard is an index for engine oils for 4-stroke motorcycle engines. There are two classes: MA and MB. For example, the following label shows the MA classification.

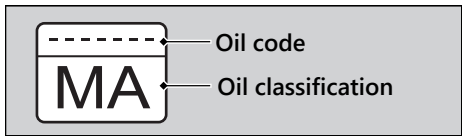

*2. The SAE standard grades oils by their viscosity.

*3. The API classification specifies the quality and performance rating of engine oils. Use SG or higher oils, excluding oils marked as "Energy Conserving" or "Resource Conserving" on the circular API service symbol.

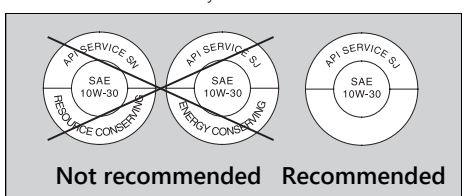

Brake Fluid

Do not add or replace brake fluid, except in an emergency. Use only fresh brake fluid from a sealed container. If you do add fluid, have the brake system serviced by your dealer as soon as possible.

NOTICE
Brake fluid can damage plastic and painted surfaces. Wipe up spills immediately and wash thoroughly.

Recommended brake fluid:
Honda DOT 3 or DOT 4 Brake Fluid or equivalent

⚠WARNING

Clean filler cap before removing. Use only DOT 3 or DOT 4 fluid from a sealed container.

Drive Chain

The drive chain must be inspected and lubricated regularly. Inspect the chain more frequently if you often ride on bad roads, ride at high speed, or ride with repeated fast acceleration. ➔ P. 75
If the chain does not move smoothly, makes strange noises, has damaged rollers, has loose pins, has missing O-rings, or kinks, have the chain inspected by your dealer.

Also inspect the drive sprocket and driven sprocket. If either has worn or damaged teeth, have the sprocket replaced by your dealer.

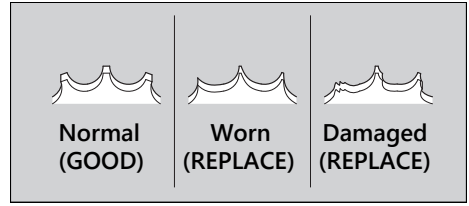

NOTICE
Use of a new chain with worn sprockets will cause rapid chain wear.

Cleaning and Lubricating

After inspecting the slack, clean the chain and sprockets while rotating the rear wheel. Use a dry cloth with chain cleaner designed specifically for O-ring chains, or neutral detergent. Use a soft brush if the chain is dirty. After cleaning, wipe dry and lubricate with the recommended lubricant.

Recommended lubricant:
Pro Honda HP Chain Lube or equivalent

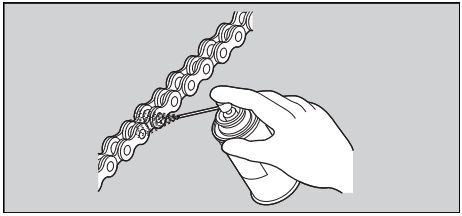

Do not use a steam cleaner, a high pressure cleaner, a wire brush, volatile solvent such as gasoline and benzene, abrasive cleaner, chain cleaner or lubricant NOT designed specifically for O-ring chains as these can damage the rubber O-ring seals.
Avoid getting lubricant on the brakes or tires.
Avoid applying excess chain lubricant to prevent spray onto your clothes and the vehicle.

Recommended Coolant

Pro Honda HP Coolant is a pre-mixed solution of antifreeze and distilled water.

Concentration:
50% antifreeze and 50% distilled water

A concentration of antifreeze below 40% will not provide proper corrosion and cold temperature protection.
A concentration of up to 60% will provide better protection in colder climates.

Continued

NOTICE
Using coolant not specified for aluminum engines or tap/mineral water can cause corrosion.

Crankcase Breather

Service more frequently when riding in rain, at full throttle, or after the vehicle is washed or overturned. Service if the deposit level can be seen in the transparent section of the drain tube.
If the drain tube overflows, the air filter may become contaminated with engine oil causing poor engine performance. ➡ P. 85

Tires (Inspecting/Replacing)

Checking the Air Pressure

Visually inspect your tires and use an air pressure gauge to measure the air pressure before each off-road ride and whenever you return to pavement after riding off-road. If you only ride on pavement, check the pressure at least once a month or any time you think the tires look low. Always check air pressure when your tires are cold.
If you decide to adjust the tire pressure for a particular off-road riding condition, make changes a little at a time.

Inspecting for Damage

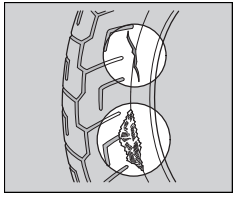

Inspect the tires for cuts, slits, or cracks that exposes fabric or cords, or nails or other foreign objects embedded in the side of the tire or the tread.
Also inspect for any unusual bumps or bulges in the side walls of the tires.

Inspecting for Abnormal Wear

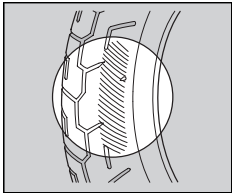

Inspect the tires for signs of abnormal wear on the contact surface.

Inspecting Tread Depth

Inspect the tread wear indicators. If they become visible, replace the tires immediately. For safe riding, you should replace the tires when the minimum tread depth is reached.

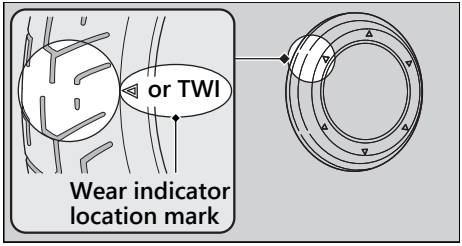

Inspecting Rims and Valve Stems

Inspect the rims for damage and loose spokes. Also inspect the valve stems for their positions. A tilted valve stem indicates the tube is slipping inside the tire or the tire is slipping on the rim. See your dealer.

⚠WARNING

Riding on tires that are excessively worn or improperly inflated can cause a crash in which you can be seriously hurt or killed.

Follow all instructions in this owner's manual regarding tire inflation and maintenance.

Continued

Have your tires replaced by your dealer.
For recommended tires, air pressure and minimum tread depth, see “Specifications.”
➔ P. 130
Follow these guidelines whenever you replace tires.

- Use the recommended tires or equivalents of the same size, construction, speed rating, and load range.
- Remember to replace the inner tube whenever you replace a tire. The old tube will probably be stretched, and it could fail if installed in a new tire.

⚠WARNING

Installing improper tires on your vehicle can adversely affect handling and stability, and can cause a crash in which you can be seriously hurt or killed.

Always use the size and type of tires recommended in this owner's manual.

Air Cleaner

This vehicle is equipped with a viscous type air cleaner element which cannot be cleaned with compressed air or otherwise without degrading its performance.
If the filter becomes dirty, replace it with a new one.

Battery

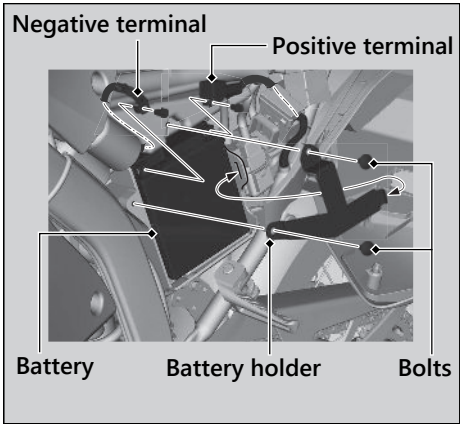

Removal

Make sure the ignition switch is in the OFF position.

1. Remove the left side cover. ➡ P. 57
2. Remove the bolts.
3. Remove the battery holder.
4. Disconnect the negative ⊖ terminal from the battery.
5. Disconnect the positive ⊕ terminal from the battery.
6. Remove the battery taking care not to drop the terminal nuts.

Installation

Install the parts in the reverse order of removal. Always connect the positive ⊕ terminal first. Make sure that bolts and nuts are tight.

Make sure the clock information is correct after the battery is reconnected. ➡ P. 22

For proper handling of the battery, see "Maintenance Fundamentals." ➡ P. 46

"Battery Goes Dead." ➡ P. 98

Seat

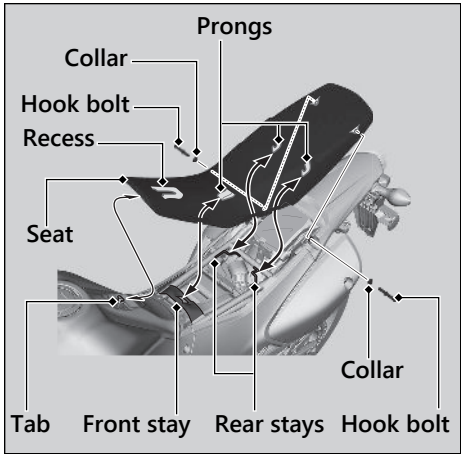

Removal

1. Remove the hook bolts and collars.
2. Pull the seat back and up.

Installation

1. Align the recess with the tab and insert the prongs into the front stay and rear stays.
2. Install the collars onto the hook bolts. Tighten the hook bolts.

Torque: 15 lbf·ft (21 N·m, 2.1 kgf·m)

Side Cover

Removal

1. Left Open the tool box. ➡ P. 34
2. Remove the bolts.
3. Remove the prongs from the grommets.
4. Remove the side cover.

Installation

Install the parts in the reverse order of removal.

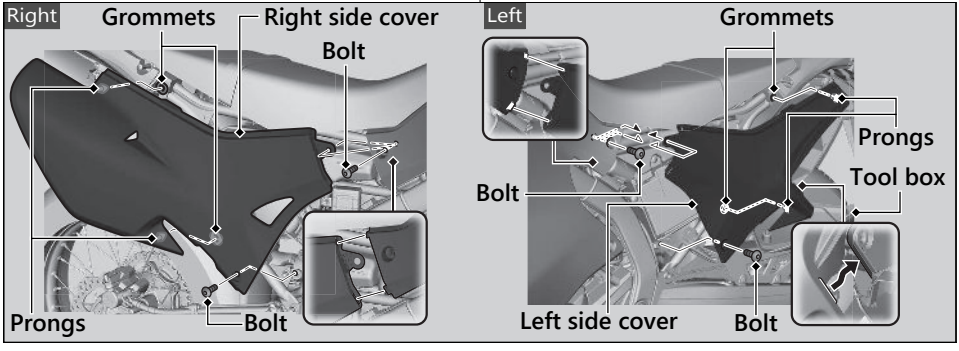

Under Cowl

Removal

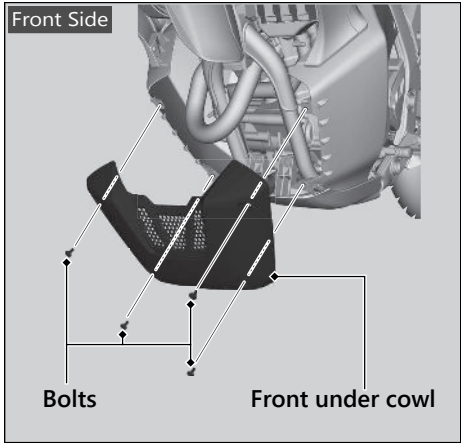

1. Remove the bolts and front under cowl.

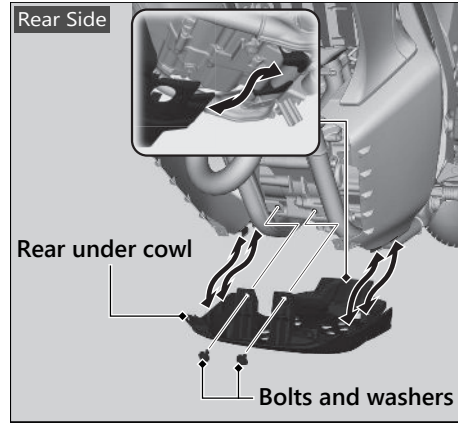

2. Remove the bolts and washers on rear under cowl.
3. Remove the rear under cowl.

Installation

Install the parts in the reverse order of removal.

Checking Spark Plug

For the recommended spark plug, see "Specifications." ➡ P. 130

Use only the recommended type of spark plug in the recommended heat range.

NOTICE
Using a spark plug with an improper heat range can cause engine damage.

This vehicle uses the spark plug that have an iridium coated center electrode.
Be sure to observe the following when servicing the spark plug.

- Do not clean the spark plug. If an electrode is contaminated with accumulated objects or dirt, replace the spark plug with a new one.
- To check the spark plug gap, use only a "wire-type feeler gauge." To prevent damaging the iridium coating of the center electrode, never use a "leaf-type feeler gauge."
- Do not adjust the spark plug gap. If the gap is out of specification, replace the spark plug with a new one.

1. Disconnect the spark plug cap from the spark plug.
2. Clean any dirt from around the spark plug base.
3. Remove the spark plug using a suitable spark plug wrench.

Continued

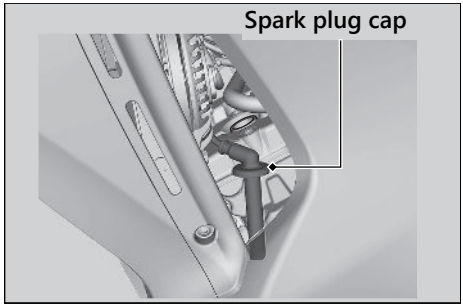

4. Inspect the electrodes and center porcelain for deposits, erosion or carbon fouling.
   ▶ If the erosion or deposit is heavy, replace the plug.
5. Make sure that a 1.0 mm wire-type feeler gauge cannot be inserted between the spark plug gap. If the gauge fits in the gap, replace the plug with a new one.

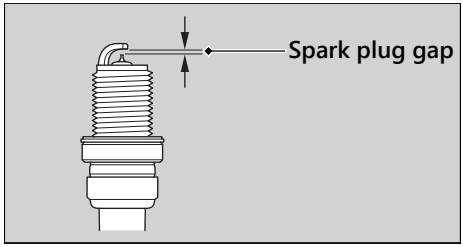

6. Make sure the plug washer is in good condition.
7. Install the spark plug. With the plug washer attached, thread the spark plug in by hand to prevent cross-threading.

8. Tighten the spark plug:
- If the old plug is good:
  1/8 turn after it seats.
- If installing a new plug, tighten it twice to prevent loosening:
  a) First, tighten the plug:
     1/2 turn after it seats.
  b) Then loosen the plug.
  c) Next, tighten the plug again:
     1/8 turn after it seats.

NOTICE
An improperly tightened spark plug can damage the engine. If a plug is too loose, a piston may be damaged. If a plug is too tight, the threads may be damaged.

9. Install the parts in the reverse order of removal.
▶ When reinstalling the spark plug cap, take care to avoid pinching any cables or wires.

Cleaning the Spark Arrester

Regular servicing prevents carbon buildup (which can diminish engine performance) and also complies with USDA regulations for regular maintenance to assure proper function. The spark arrester prevents random sparks from the combustion process in your engine from reaching the environment.

1. Allow the engine and muffler to cool.
2. Remove the right side cover. ➔ P. 57
3. Remove the muffler cover bolts and muffler cover from the muffler.
4. Remove the tail cap cover bolts and tail cap cover from the muffler.

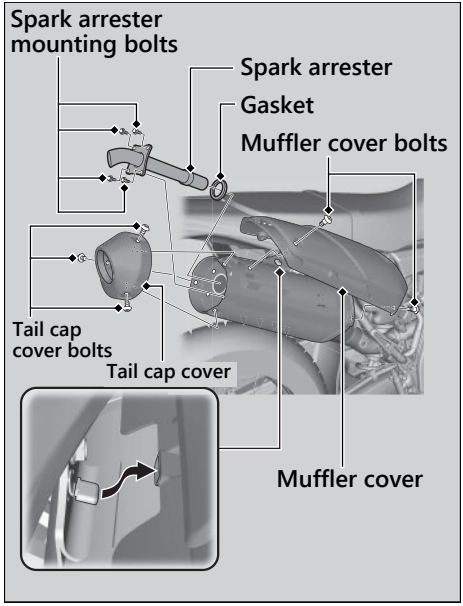

5. Remove the spark arrester mounting bolts, spark arrester and gasket from the muffler.
6. Use a brush to remove carbon deposits from the spark arrester screen. Be careful to avoid damaging the spark arrester screen. The spark arrester must be free of breaks and holes. Replace, if necessary. Check the gasket. Replace, if necessary.

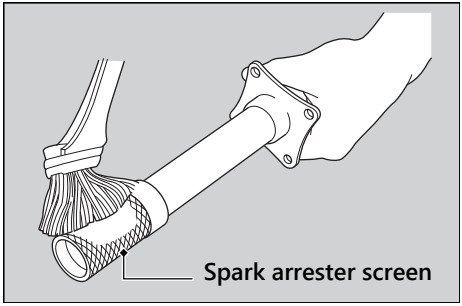

7. Install the gasket and the spark arrester, and tighten the spark arrester mounting bolts.

Torque: 6.6 lbf·ft (9.0 N·m, 0.9 kgf·m)

8. Install the tail cap cover and tighten the tail cap cover bolts.

Torque: 3.9 lbf·ft (5.25 N·m, 0.5 kgf·m)

9. Install the muffler cover and tighten the muffler cover bolts.

Torque: 1.1 lbf·ft (1.5 N·m, 0.2 kgf·m)

10. Install the right side cover. ➡ P. 57

Checking the Engine Oil

1. If the engine is cold, idle the engine for 3 to 5 minutes.
2. Turn the ignition switch to the OFF position and wait for 2 to 3 minutes.
3. Place your vehicle in an upright position on a firm, level surface.
4. Check that the oil level is between the upper level and lower level marks on the oil level inspection window.

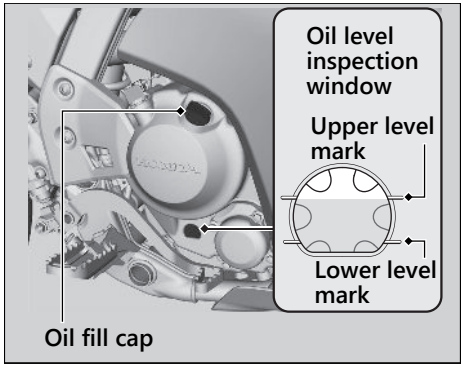

Adding Engine Oil

If the engine oil is below or near the lower level mark, add the recommended engine oil.
➡ P. 49, ➡ P. 130

1. Remove the oil fill cap. Add the recommended oil until it reaches the upper level mark.
   - ▶ Place your vehicle in an upright position on a firm, level surface when checking the oil level.
   - ▶ Do not overfill above the upper level mark.
   - ▶ Make sure no foreign objects enter the oil filler opening.
   - ▶ Wipe up any spills immediately.
2. Securely reinstall the oil fill cap.

NOTICE
Overfilling with oil or operating with insufficient oil can cause damage to your engine. Do not mix different brands and grades of oil. They may affect lubrication and clutch operation.

For the recommended oil and oil selection guidelines, see “Maintenance Fundamentals.”
➡ P. 49

Changing Engine Oil & Filter

Changing the oil and filter requires special tools. We recommend that you have your vehicle serviced by your dealer.

Use a new Honda Genuine oil filter or equivalent specified for your model.

NOTICE
Using the wrong oil filter can result in serious damage to the engine.

1. Remove the under cowl. ➡ P. 58
2. If the engine is cold, idle the engine for 3 to 5 minutes.
3. Turn the ignition switch to the OFF position and wait for 2 to 3 minutes.
4. Place your vehicle on a firm, level surface.
5. Place a drain pan under the drain bolt.
6. Remove the oil fill cap, drain bolt, and sealing washer to drain the oil.

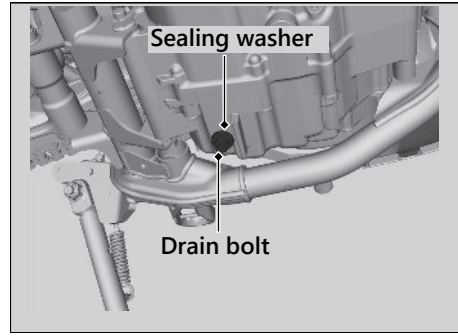

7. Remove the oil filter cover, oil filter, spring and gasket by removing the oil filter cover bolts.
   ▶ Discard the oil and oil filter at an approved recycling center.

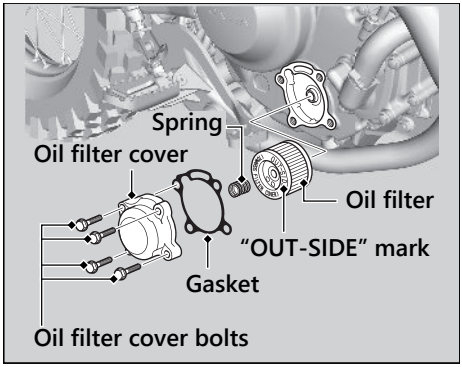

8. Install a new oil filter with the "OUT-SIDE" mark facing out.
9. Install the spring into the oil filter cover, and then install a new gasket and oil filter cover by tightening the oil filter cover bolts.

Torque: 7 lbf·ft (10 N·m, 1.0 kgf·m)

10. Install a new sealing washer onto the drain bolt. Tighten the drain bolt.

Torque: 18 lbf·ft (24 N·m, 2.4 kgf·m)

11. Fill the crankcase with the recommended oil (➡ P. 49, ➡ P. 130) and install the oil fill cap.

Required oil

When changing oil & engine oil filter:
1.6 US qt (1.5 L)

When changing oil only:
1.5 US qt (1.4 L)

12. Check the oil level. ➡ P. 64
13. Check that there are no oil leaks.
14. Install the under cowl. ➡ P. 58

NOTICE
Improper installation of the oil filter can result in serious damage to the engine.

Changing Air Cleaner Element

Use a new Honda Genuine air cleaner element or an equivalent specified for your vehicle.

NOTICE
Using the wrong air cleaner element may cause premature engine wear or performance problems.

1. Remove the right side cover. ➡ P. 57
2. Remove the air cleaner housing cover by removing the screws.
3. Release the tabs and pull out the air cleaner element.
4. Install the new air cleaner element.
   ▶ Make sure the air cleaner element is installed securely.
5. Install the parts in the reverse order of removal.

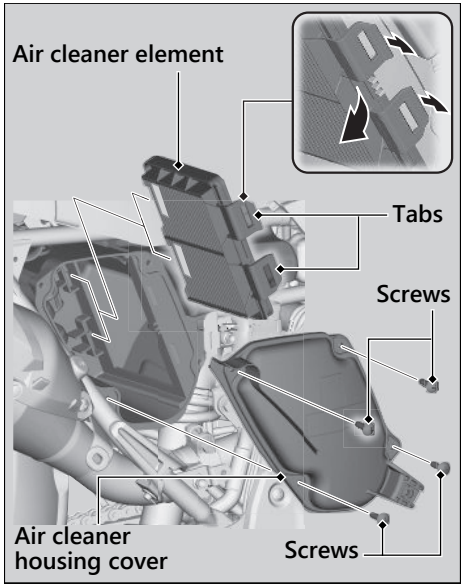

Checking the Coolant

Check the coolant level in the reserve tank while the engine is cold.

1. Place your vehicle on a firm, level surface.
2. Hold your vehicle in an upright position.
3. Check that the coolant level is between the UPPER level and LOWER level marks on the reserve tank.

If the coolant level is dropping noticeably or the reserve tank is empty, you likely have a serious leak. Have your vehicle inspected by your dealer.

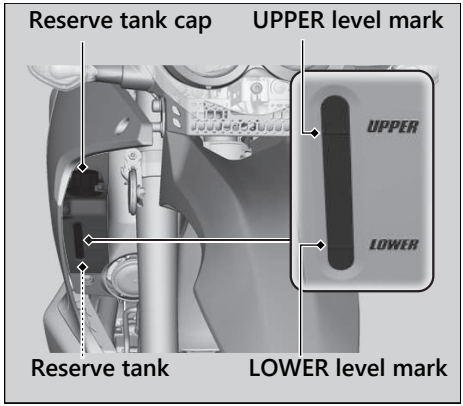

Adding Coolant

If the coolant level is below the LOWER level mark, add the recommended coolant (➡ P. 51) until the level reaches the UPPER level mark.
Add fluid only from the reserve tank cap and do not remove the radiator cap.

1. Remove the reserve tank cap and add fluid while monitoring the coolant level.
   ▶ Do not overfill above the UPPER level mark.
   ▶ Make sure no foreign objects enter the reserve tank opening.
2. Securely reinstall the reserve tank cap.

⚠WARNING

Removing the radiator cap while the engine is hot can cause the coolant to spray out, potentially scalding you.

Always let the engine and radiator cool down before removing the radiator cap.

Changing Coolant

Have your dealer change the coolant unless you have the proper tools and are mechanically qualified.

Checking Brake Fluid

1. Place your vehicle in an upright position on a firm, level surface.
2. Front Check that the brake fluid reservoir is horizontal and that the fluid level is above the LOWER level mark.
   Rear Check that the brake fluid reservoir is horizontal and that the fluid level is between the LOWER level and UPPER level marks.

If the brake fluid level in either reservoir is below the LOWER level mark or the brake lever and pedal freeplay becomes excessive, inspect the brake pads for wear.
If the brake pads are not worn, you most likely have a leak. Have your vehicle inspected by your dealer.

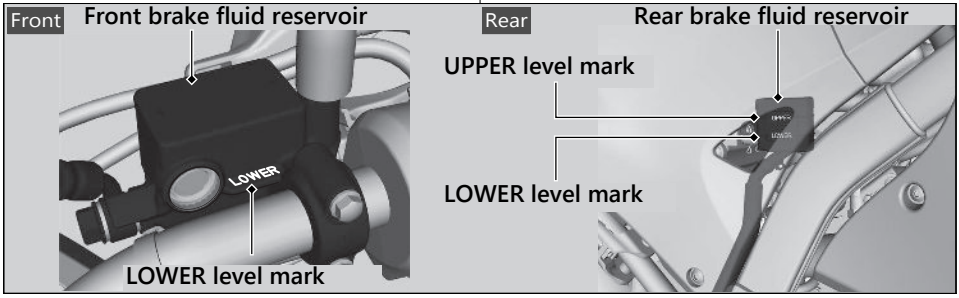

Inspecting the Brake Pads

Check the condition of the brake pad wear indicators.
The pads need to be replaced if a brake pad is worn to the indicator.

1. Front Inspect the brake pads from below the brake caliper.
2. Rear Inspect the brake pads from the rear right of the vehicle.

If necessary have the pads replaced by your dealer.
Always replace both left and right brake pads at the same time.

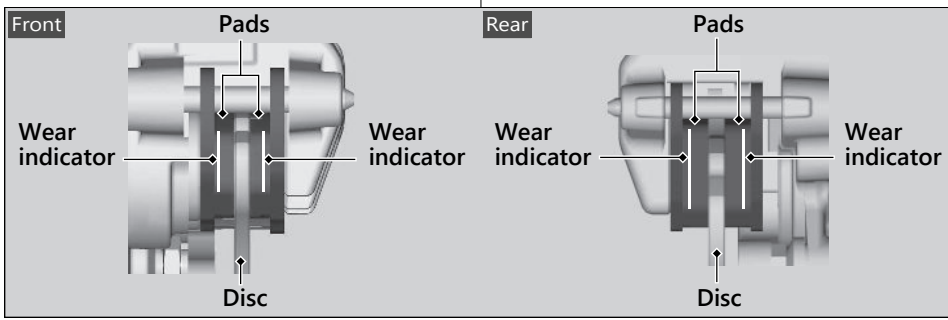

Adjusting the Brake Light Switch

Check the operation of the brake light switch. Hold the brake light switch and turn the adjusting nut in the direction A if the switch operates too late, or turn the nut in the direction B if the switch operates too soon.

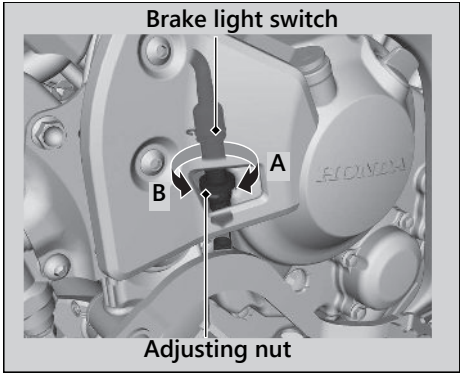

Checking the Side Stand

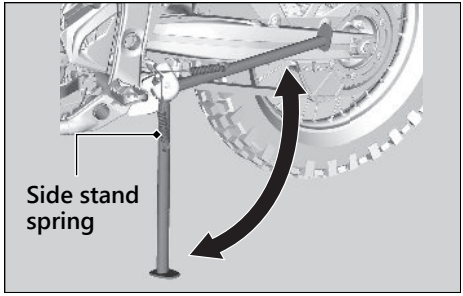

1. Check that the side stand operates smoothly. If the side stand is stiff or squeaky, clean the pivot area and lubricate the pivot bolt with clean grease.
2. Check the spring for damage or loss of tension.
3. Sit on the vehicle, shift the transmission to Neutral, and raise the side stand.
4. Start the engine, pull the clutch lever in, and shift the transmission into gear.
5. Lower the side stand all the way. The engine should stop as you lower the side stand. If the engine doesn't stop, have your vehicle inspected by your dealer.

Inspecting the Drive Chain Slack

Check the drive chain slack at several points along the chain. If the slack is not constant at all points, some links may be kinked and binding.
Have the chain inspected by your dealer.

1. Shift the transmission to Neutral. Stop the engine.
2. Place your vehicle on its side stand on a firm, level surface.
3. Check the slack in the lower half of the drive chain midway between the sprockets.

Drive chain slack:
1.6 - 2.0 in (40 - 50 mm)

▶ Do not ride your vehicle if the slack exceeds 2.4 in (60 mm).

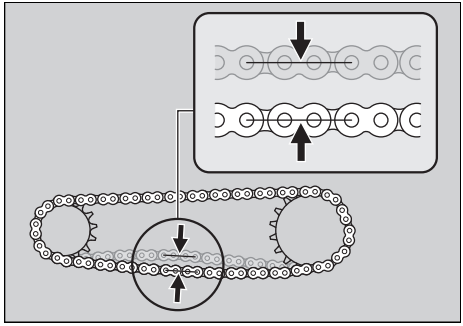

4. Roll the vehicle forward and check that the chain moves smoothly.
5. Inspect the sprockets. ➡ P. 50
6. Clean and lubricate the drive chain. ➡ P. 51

Adjusting the Drive Chain Slack

Adjusting the chain requires special tools. Have the drive chain slack adjusted by your dealer.

CRF250RLA

When adjusting the drive chain slack, be careful not to damage the wheel speed sensor and pulser ring.

1. Shift the transmission to Neutral. Stop the engine.
2. Place your vehicle on its side stand on a firm, level surface.
3. Loosen the rear axle nut.
4. Loosen the lock nuts on both adjusting bolts.

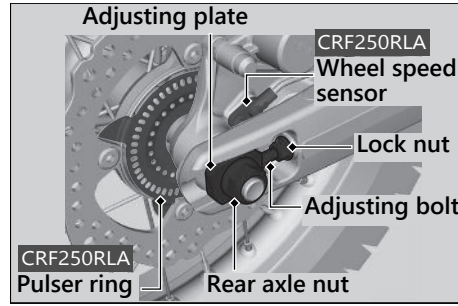

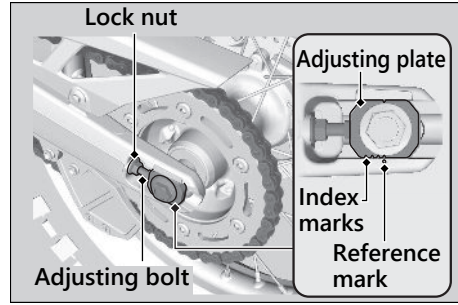

5. Turn both adjusting bolts an equal number of turns until the correct drive chain slack is obtained. Turn the adjusting bolts counterclockwise to tighten the chain. Turn the adjusting bolts clockwise and push the rear wheel forward to provide more slack.
   Adjust the slack at a point midway between the drive sprocket and the driven sprocket.
   Check the drive chain slack. ➡ P. 75
6. Check rear axle alignment by making sure the index marks on the chain adjusting plate aligns with the reference mark on both sides of the swingarm.
   Both marks should correspond. If the axle is misaligned, turn the right or left adjusting bolt until the marks are aligned and recheck chain slack.
7. Tighten the rear axle nut.

Torque: 65 lbf·ft (88 N·m, 9.0 kgf·m)

8. Hold the adjusting bolts and tighten the lock nuts.

Torque: 20 lbf·ft (27 N·m, 2.8 kgf·m)

9. Recheck drive chain slack.

If a torque wrench was not used for installation, see your dealer as soon as possible to verify proper assembly. Improper assembly may lead to loss of braking capacity.

Continued

Checking the Drive Chain Wear

Check the chain wear label when adjusting the drive chain. If the indicator groove on the chain adjuster plate enters the red zone on the label after the chain has been adjusted to the proper slack, the chain is excessively worn and must be replaced.

Chain: DID 520VF

If necessary have the drive chain replaced by your dealer.

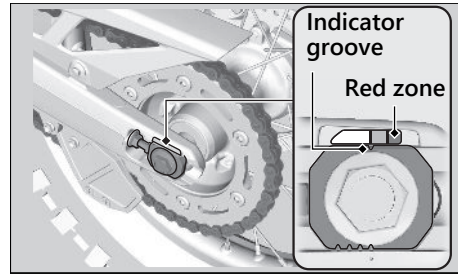

Checking the Drive Chain Slider

Check the condition of the drive chain slider. The drive chain slider will need to be replaced if the chain slider is worn to the wear limit indicator or wear limit line.
To inspect the wear limit line, remove the drive sprocket cover by removing the bolts. If necessary have the drive chain slider replaced by your dealer.

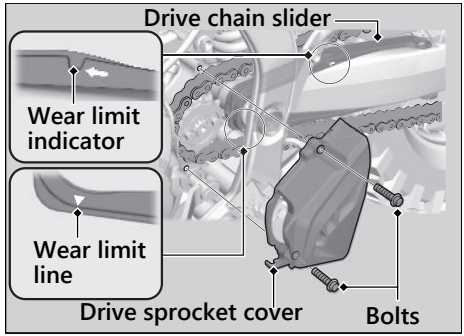

Wheels Rims & Spokes

Keeping the wheels true (round) and maintaining correct spoke tension is critical to safe vehicle operation.
Excessively loose spokes may result in instability at high speeds and possible loss of control.
It is not necessary to remove the wheels to perform the recommended service in the Maintenance Schedule. However, information for wheel removal is provided for emergency situations. ➔ P. 92

1. Inspect the wheel rims and spokes for damage.
2. Tighten any loose spokes.
3. Rotate the wheel slowly to see if it appears to "wobble." If it does, the rim is out of round or not "true." If the wobble is noticeable, see your dealer for inspection.

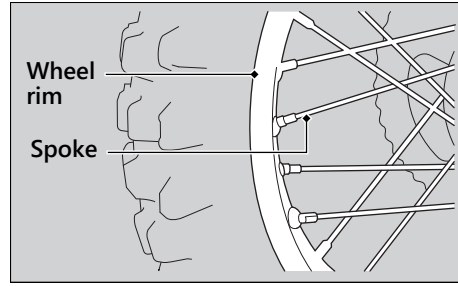

Checking the Clutch

Checking the Clutch Lever Freeplay

Check the clutch lever freeplay.

Freeplay at the clutch lever:
0.4 - 0.8 in (10 - 20 mm)

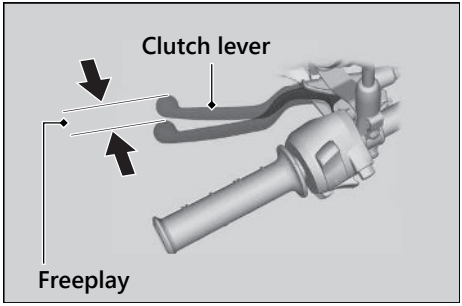

Check the clutch cable for kinks or signs of wear. If necessary have it replaced by your dealer.
Lubricate the clutch cable with a commercially available cable lubricant to prevent premature wear and corrosion.

NOTICE
Improper freeplay adjustment can cause premature clutch wear.

Adjusting the Clutch Lever Freeplay

Minor Adjustment

Attempt adjustment with the minor clutch cable adjuster first.

1. Pull back the rubber dust cover.
2. Loosen the minor lock nut.
3. Turn the minor clutch cable adjuster until the freeplay is 0.4 - 0.8 in (10 - 20 mm).
4. Tighten the minor lock nut and check the freeplay again.
5. Install the rubber dust cover.

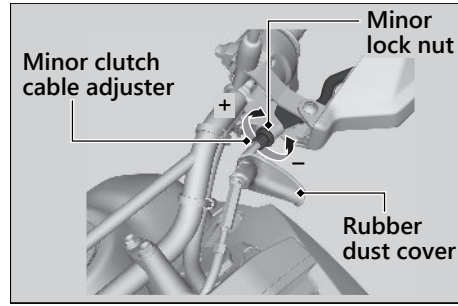

Major Adjustment

If the minor clutch cable adjuster is threaded out near its limit, or the correct freeplay cannot be obtained, attempt adjustment with the major clutch cable adjuster.

1. Pull back the rubber dust cover. Loosen the minor lock nut and turn the minor clutch cable adjuster all the way in (to provide maximum freeplay). Tighten the minor lock nut. Install the rubber dust cover.
2. Loosen the major lock nut.
3. Turn the major clutch cable adjuster until the clutch lever freeplay is 0.4 - 0.8 in (10 - 20 mm).
4. Tighten the major lock nut and check the clutch lever freeplay.
5. Start the engine, pull the clutch lever in, and shift into gear. Make sure the engine does not stall and the vehicle does not creep. Gradually release the clutch lever and open the throttle. Your vehicle should move smoothly and accelerate gradually.

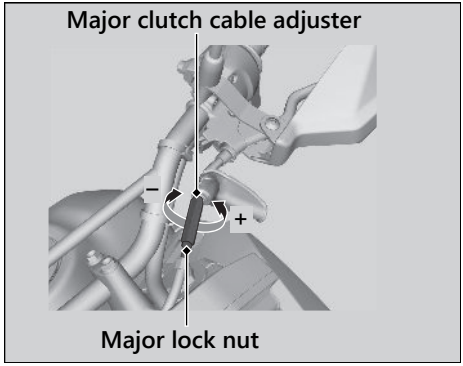

If proper adjustment cannot be obtained or the clutch does not work correctly, see your dealer.

Checking the Throttle

With the engine off, check that the throttle rotates smoothly from fully closed to fully open in all steering positions and throttle freeplay is correct. If the throttle does not move smoothly, close automatically, or if the cable is damaged, have the vehicle inspected by your dealer.

Freeplay at the throttle grip flange:
0.1 - 0.2 in (2 - 6 mm)

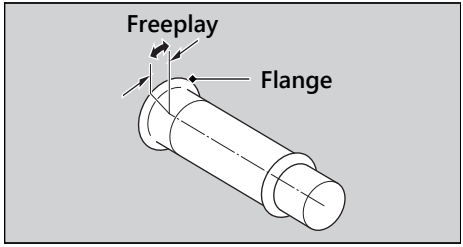

Adjusting the Throttle Freeplay

1. Loosen the lock nut.
2. Turn the adjuster until the freeplay is 0.1 - 0.2 in (2 - 6 mm).
3. Tighten the lock nut and inspect the throttle action again.

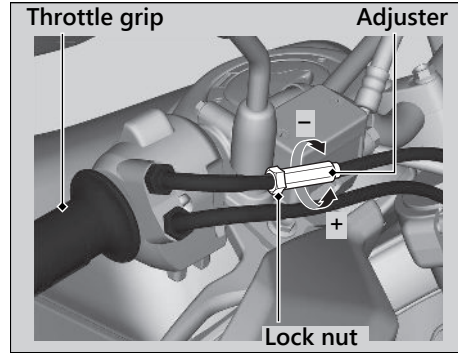

Cleaning the Crankcase Breather

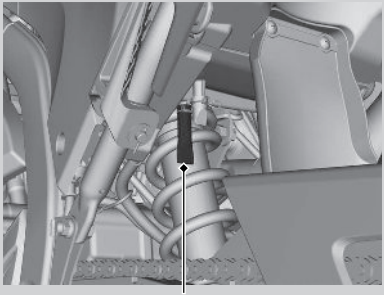

Crankcase breather tube

1. Place a suitable container to receive deposits.
2. Remove the crankcase breather tube and drain deposits into the container.
3. Reinstall the crankcase breather tube.

Adjusting the Headlight Aim

You can adjust vertical aim of the headlight for proper alignment. Turn the pinion using a Phillips screwdriver in or out as necessary. Obey local laws and regulations.

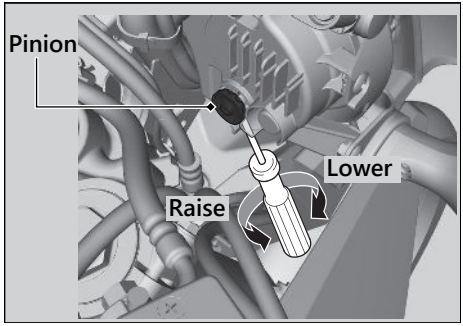

Troubleshooting

Engine Will Not Start ..... P. 88
Overheating (High coolant temperature indicator is on) ..... P. 89
Warning Indicators On or Flashing ..... P. 90
PGM-FI (Programmed Fuel Injection) Malfunction Indicator Lamp (MIL) ..... P. 90
ABS (Anti-lock Brake System) Indicator ..... P. 90
Other Warning Indications ..... P. 91
Fuel Gauge Failure Indication ..... P. 91
Tire Puncture ..... P. 92
Electrical Trouble ..... P. 98
Battery Goes Dead ..... P. 98
Burned-out Light Bulb ..... P. 98
Blown Fuse ..... P. 102
Unstable Engine Operation Occurs Intermittently ..... P. 106

Starter Motor Operates But Engine Does Not Start

Check the following items:

- Check the correct engine starting sequence. ➔ P. 30
- Check that there is gasoline in the fuel tank.
- Check if the PGM-FI malfunction indicator lamp (MIL) is on.
  ▶ If the indicator lamp is on, contact your dealer as soon as possible.

Starter Motor Does Not Operate

Check the following items:

- Check the correct engine starting sequence. ➔ P. 30
- Make sure engine stop switch is in the ◯ (Run) position. ➔ P. 27
- Check for a blown fuse. ➔ P. 102
- Check for a loose battery connection (➔ P. 55) or battery terminal corrosion (➔ P. 46).
- Check the condition of the battery. ➔ P. 98

If the problem continues, have your vehicle inspected by your dealer.

Overheating (High coolant temperature indicator is on)

The engine is overheating when the following occurs:

- High coolant temperature indicator comes on.
- Acceleration becomes sluggish.
  If this occurs, pull safely to the side of the road and perform the following procedure.

Extended fast idling may cause the high coolant temperature indicator to come on.

NOTICE
Continuing to ride with an overheated engine can cause serious damage to the engine.

1. Stop the engine using the ignition switch, and then turn the ignition switch to the ON position.
2. Check that the radiator fan is operating, and then turn the ignition switch to the OFF position.

If the fan is not operating:
Suspect a fault. Do not start the engine. Transport your vehicle to your dealer.

If the fan is operating:
Allow the engine to cool with the ignition switch in the OFF position.

3. After the engine has cooled, inspect the radiator hose and check if there is a leak. ➔ P. 69

   If there is a leak:
   Do not start the engine. Transport your vehicle to your dealer.
4. Check the coolant level in the reserve tank. ➔ P. 69
   ▶ Add coolant as necessary.
5. If 1-4 check normal, you may continue riding, but closely monitor the high coolant temperature indicator.

PGM-FI (Programmed Fuel Injection) Malfunction Indicator Lamp (MIL)

If the indicator comes on while riding, you may have a serious problem with the PGM-FI system. Reduce speed and have your vehicle inspected by your dealer as soon as possible.

ABS (Anti-lock Brake System) Indicator

CRF250RLA

If the indicator operates in one of the following ways, you may have a serious problem with the ABS. Reduce your speed and have your vehicle inspected by your dealer as soon as possible.

- Indicator comes on or starts flashing while riding.
- Indicator does not come on when the ignition switch is in the ON position.
- Indicator does not go off at speeds above 6 mph (10 km/h).

If the ABS indicator stays on, your brakes will continue to work as a conventional system, but without the anti-locking function.

The ABS indicator may flash if you turn the rear wheel while the rear wheel is lifted off the ground. In this case, turn the ignition switch to the OFF position, and then to the ON position again. The ABS indicator will go off after your speed reaches 19 mph (30 km/h).

Fuel Gauge Failure Indication

If the fuel system has an error, the fuel gauge indicators will be displayed as shown in the illustration.
If this occurs, see your dealer as soon as possible.

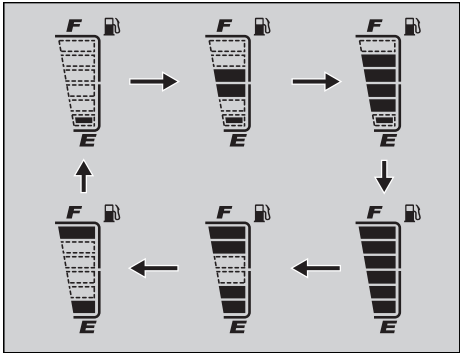

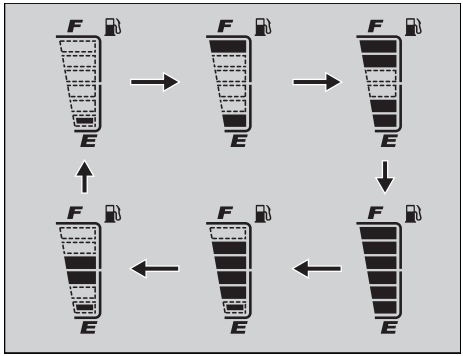

Repairing a puncture or removing a wheel requires special tools and technical expertise. We recommend you have this type of service performed by your dealer.
After an emergency repair, always have the tire inspected/replaced by your dealer.

Tube Repair and Replacement

If a tube is punctured or damaged, you should replace it as soon as possible. A tube that is repaired may not have the same reliability as a new one, and it may fail while you are riding.
If you need to make a temporary repair by patching a tube or using an aerosol sealant, ride cautiously at reduced speed and have the tube replaced before you ride again.
Anytime a tube is replaced, the tire should be carefully inspected as described.

⚠WARNING

Riding your vehicle with a temporary tire or tube repair can be risky. If the temporary repair fails, you can crash and be seriously injured or killed.

If you must ride with a temporary tire or tube repair, ride slowly and carefully and do not exceed 30 mph (50 km/h) until the tire or tube is replaced.

Removing Wheels

Follow these procedures if you need to remove a wheel in order to repair a puncture.

CRF250RLA

When removing and installing the wheel, be careful not to damage the wheel speed sensor and pulser ring.

Front Wheel

Removal

1. Place your vehicle on a firm, level surface.
2. Loosen the axle pinch bolts.
3. Loosen the front axle shaft.
4. Support your vehicle securely and raise the front wheel off the ground using a maintenance stand or a hoist.
5. Remove the front axle shaft, side collars and wheel.
   - ▶ Avoid getting grease, oil, or dirt on the disc or pad surfaces.
   - ▶ Do not pull the brake lever while the brake caliper is removed.

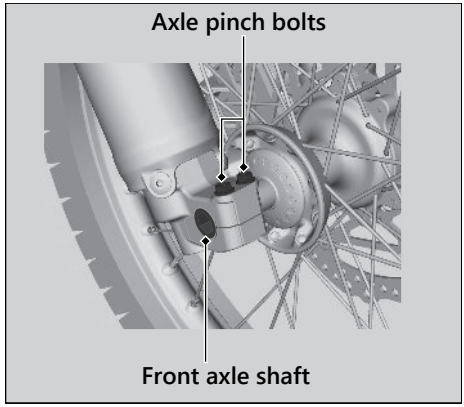

Continued

Installation

1. Attach the side collars to the wheel.
2. On the right side, place the wheel between the fork legs and insert the front axle shaft, through the right fork leg and wheel hub.
   ▶ Avoid scratching the brake pads, carefully fit the brake disc between the pads.

NOTICE
When installing a wheel or caliper into original position, carefully fit the brake disc between the pads to avoid scratching them.

3. Tighten the axle shaft.

Torque: 51 lbf·ft (69 N·m, 7.0 kgf·m)

4. Lower the front wheel on the ground.
5. Apply the brake lever several times. Then, pump the fork several times.
6. Tighten the axle pinch bolt.

Torque: 16 lbf·ft (22 N·m, 2.2 kgf·m)

7. Raise the front wheel off the ground again, and check that the wheel rotates freely after you release the brake.
8. Lower the front wheel on the ground again.

If a torque wrench was not used for installation, see your dealer as soon as possible to verify proper assembly. Improper assembly may lead to loss of braking capacity.

Rear Wheel

Removal

1. Place your vehicle on a firm, level surface.
2. Support your vehicle securely and raise the rear wheel off the ground using a hoist.
3. Loosen the rear axle nut and lock nuts, and turn the adjusting bolts so the rear wheel can be moved all the way forward for maximum drive chain slack.
4. Remove the rear axle nut.
5. Remove the drive chain from the driven sprocket by pushing the rear wheel forward.
6. Remove the rear axle shaft and adjusting plates.

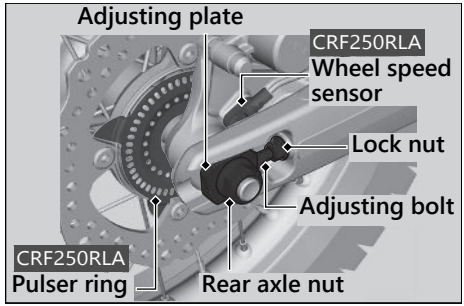

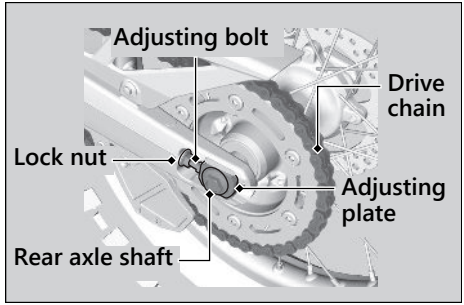

Continued

7. Remove the brake caliper bracket, rear wheel and side collars.
   ▶ Support the brake caliper assembly so that it doesn't hang from the brake hose. Do not twist the brake hose.
   ▶ Avoid getting grease, oil, or dirt on the disc or pad surfaces.
   ▶ Do not push the brake pedal while the wheel is removed.

Installation

1. To install the rear wheel, reverse the removal procedure.
   ▶ Take care to prevent the brake caliper from scratching the wheel during installation.

NOTICE
When installing a wheel or caliper into original position, carefully fit the brake disc between the pads to avoid scratching them.

2. Make sure that the slot on the brake caliper bracket is positioned in the lug on the swingarm.

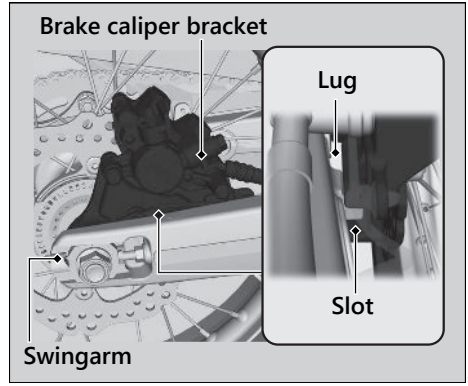

3. Adjust the drive chain. ➡ P. 76
4. Install and tighten the rear axle nut.

Torque: 65 lbf·ft (88 N·m, 9.0 kgf·m)

5. After installing the wheel, apply the brake pedal several times, then check if the wheel rotates freely. Recheck the wheel if the brake drags or if the wheel does not rotate freely.

If a torque wrench was not used for installation, see your dealer as soon as possible to verify proper assembly. Improper assembly may lead to loss of braking capacity.

Battery Goes Dead

Charge the battery using a motorcycle battery charger.
Remove the battery from the vehicle before charging.
Do not use an automobile-type battery charger, as these can overheat a motorcycle battery and cause permanent damage. If the battery does not recover after recharging, contact your dealer.

NOTICE
Jump starting using an automobile battery can damage your vehicle's electrical system and is not recommended.
Bump starting is also not recommended.

Burned-out Light Bulb

Follow the procedure below to replace a burned-out light bulb.
Turn the ignition switch to the OFF or LOCK position.
Allow the bulb to cool before replacing it.
Do not use bulbs other than those specified.
Check the replacement bulb for correct operation before riding.

For the light bulb wattage, see "Specifications." ➔ P. 131

Headlight

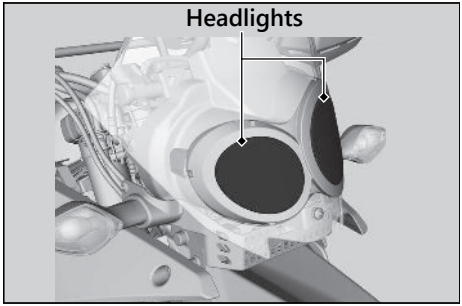

The headlights use several LEDs.
If there is an LED which is not turned on, see your dealer for this servicing.

Brake light/Taillight Bulb

1. Remove the seat. P. 56
2. Remove the hook bolts and collars.
3. Remove the prongs from the grommets.
4. Remove the rear fender.

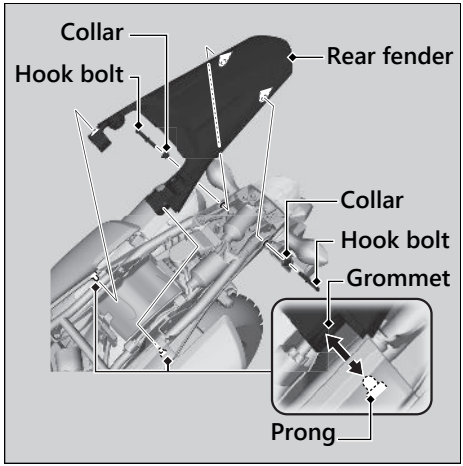

Continued

5. Turn the socket counterclockwise, and remove it.
6. Slightly press the bulb and turn it counterclockwise.
7. Install a new bulb and parts in the reverse order of removal.

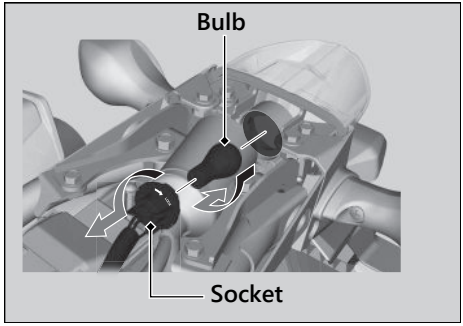

Front/Rear Turn Signal Bulb

1. Remove the screw.
2. Remove the turn signal lens.
3. Slightly press the bulb and turn it counterclockwise.

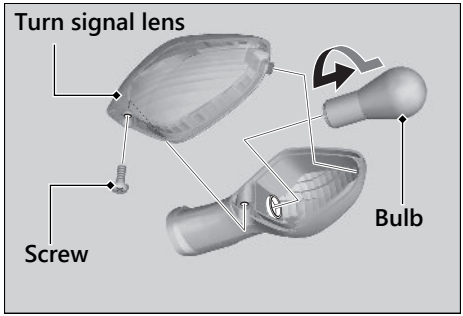

4. Install a new bulb and parts in the reverse order of removal.

License Plate Light

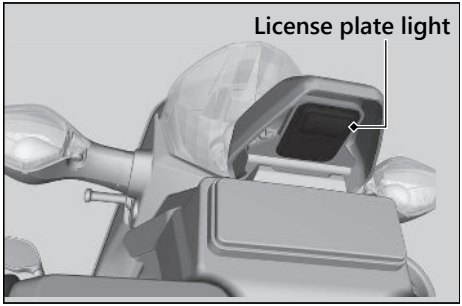

The license plate light uses an LED.
If the LED is not turned on, see your dealer for servicing.

Blown Fuse

Before handling fuses, see "Inspecting and Replacing Fuses." ➡ P. 48

Fuse Box Fuses

1. Remove the left side cover. ➡ P. 57
2. Open the fuse box cover.
3. Pull the fuses out with the fuse puller in the tool kit one by one check for a blown fuse. Always replace a blown fuse with a spare fuse of the same rating.
4. Close the fuse box cover.
5. Install the left side cover.

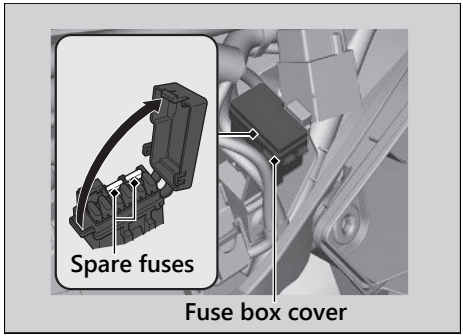

Main Fuse

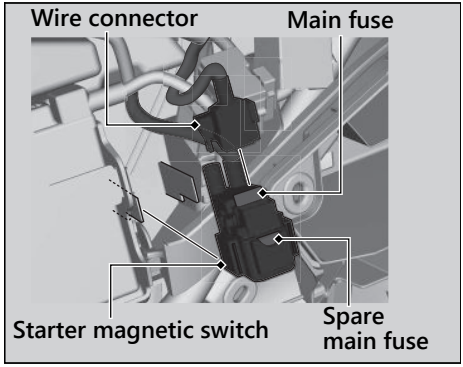

1. Remove the left side cover. ➡ P. 57
2. Pull the starter magnetic switch out.
3. Disconnect the wire connector of the starter magnetic switch.
4. Pull the main fuse out with the fuse puller in the tool kit and check for a blown fuse. Always replace a blown fuse with a spare fuse of the same rating.
   ▶ Spare main fuse is provided in the starter magnetic switch.
5. Reinstall parts in the reverse order of removal.

Continued

ABS Fuse

CRF250RLA

ABS Main fuse

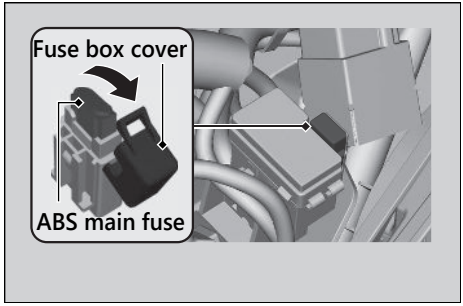

1. Remove the left side cover. ➡ P. 57
2. Open the fuse box cover.
3. Pull the ABS main fuse out with the fuse puller in the tool kit and check for a blown fuse. Always replace a blown fuse with a spare fuse of the same rating.
   ▶ Spare ABS main fuse is provided in the fuse box. ➡ P. 102
4. Close the fuse box cover.
5. Reinstall the left side cover.

CRF250RLA

Other fuses

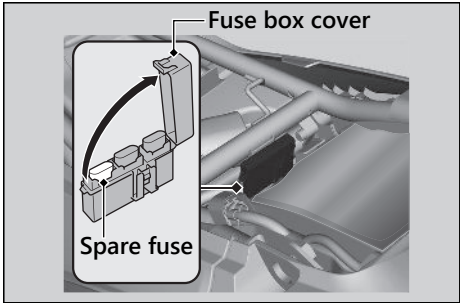

1. Remove the seat. ➡ P. 56
2. Open the fuse box cover.
3. Pull the fuses out with the fuse puller in the tool kit one by one check for a blown fuse. Always replace a blown fuse with a spare fuse of the same rating.
4. Close the fuse box cover.
5. Reinstall the seat.

NOTICE

If a fuse fails repeatedly, you likely have an electrical problem. Have your vehicle inspected by your dealer.

Unstable Engine Operation Occurs Intermittently

If the fuel pump filter is clogged, unstable engine operation will occur intermittently while riding.
Even if this symptom occurs, you can continue to ride your vehicle.

If unstable engine operation occurs even if sufficient fuel is available, have your vehicle inspected by your dealer as soon as possible.

Information

Keys ..... P. 108
Instruments, Controls, & Other Features ... P. 109
Caring for Your Vehicle ..... P. 110
Storing Your Vehicle ..... P. 113
Transporting Your Vehicle ..... P. 114
You & the Environment ..... P. 115
Vehicle Identification Number ..... P. 116
Emission Control Systems ..... P. 117
Catalytic Converter ..... P. 121
Oxygenated Fuels ..... P. 122
Authorized Manuals ..... P. 123
Warranty Coverage and Service ..... P. 124
Honda Contacts ..... P. 126
USA Reporting Safety Defects ..... P. 128

Keys

Ignition Key

Be sure to record the key number provided with the key number plate. Store the spare key and key number in a safe location.
To make a duplicate, take the spare key or the key number to your dealer.
If you lose all ignition keys and the key number, the ignition switch assembly will probably have to be removed by your dealer to determine the key number.

A metal key holder may cause damage to the area surrounding the ignition switch.

Instruments, Controls, & Other Features

Ignition Switch

Leaving the ignition switch in the ON position with the engine stopped will drain the battery. Do not turn the key while riding.

Engine Stop Switch

Do not use the engine stop switch except in an emergency. Doing so when riding will cause the engine to suddenly turn off, making riding unsafe.
If you stop the engine using the engine stop switch, turn the ignition switch to the OFF position. Failing to do so will drain the battery.

Odometer

The display locks at 999,999 when the read-out exceeds 999,999.

Tripmeter

The tripmeters return to 0.0 when each read-out exceeds 9,999.9.

Document Bag

The owner's manual, registration, and insurance information can be stored in the plastic document bag located under the seat.

Ignition Cut-off System

A banking (lean angle) sensor automatically stops the engine and fuel pump if the vehicle falls over. To reset the sensor, you must turn the ignition switch to the OFF position and back to the ON position before the engine can be restarted.

Caring for Your Vehicle

Frequent cleaning and polishing is important to ensure the life of your Honda. A clean vehicle makes it easier to spot potential problems.
In particular, seawater and salts used to prevent ice on roads promote the formation of corrosion. Always wash your vehicle thoroughly after riding on coastal or treated roads.

Washing

Allow the engine, muffler, brakes, and other high-temperature parts to cool before washing.

1. Rinse your vehicle thoroughly using a low pressure garden hose to remove loose dirt.
2. If necessary, use a sponge or a soft towel with mild cleaner to remove road grime.
   ▶ Clean the headlight lens, panels, and other plastic components with extra care to avoid scratching them.
   Avoid directing water into the air cleaner, muffler, and electrical parts.
3. Thoroughly rinse your vehicle with plenty of clean water and dry with a soft, clean cloth.
4. After the vehicle dries, lubricate any moving parts.
   ▶ Make sure that no lubricant spills onto the brakes or tires. Brake discs, pads, drum or shoes contaminated with oil will suffer greatly reduced braking effectiveness and can lead to a crash.
5. Lubricate the drive chain immediately after washing and drying the vehicle.
6. Apply a coat of wax to prevent corrosion.
   ▶ Avoid products that contain harsh detergents or chemical solvents. These can damage the metal, paint, and plastic on your vehicle.
   Keep the wax clear of the tires and brakes.
   ▶ If your vehicle has any matte painted parts, do not apply a coat of wax to the matte painted surface.

Washing Precautions

Follow these guidelines when washing:

- Do not use high-pressure washers:
  - ▶ High-pressure water cleaners can damage moving parts and electrical parts, rendering them inoperable.
  - ▶ Water in the air intake can be drawn into the throttle body and/or enter the air cleaner.
- Do not direct water at the muffler:
  - ▶ Water in the muffler can prevent starting and causes rust in the muffler.
- Dry the brakes:
  - ▶ Water adversely affects braking effectiveness. After washing, apply the brakes intermittently at low speed to help dry them.
- Do not direct water under the seat:
  - ▶ Water in the under seat compartment can damage your documents and other belongings.
- Do not direct water at the air cleaner:
  - ▶ Water in the air cleaner can prevent the engine from starting.
- Do not direct water near the headlight:
  - ▶ The headlight's inside lens may fog temporarily after washing or while riding in the rain. This does not impact the headlight function.
    However, if you see a large amount of water or ice accumulated inside the lens(es), have your vehicle inspected by your dealer.
- Do not use wax or polishing compounds on matte painted surface:
  - ▶ Use a soft cloth or sponge, plenty of water, and a mild detergent to clean matte painted surfaces. Dry with a soft clean cloth.

Aluminum Components

Aluminum will corrode from contact with dirt, mud, or road salt. Clean aluminum parts regularly and follow these guidelines to avoid scratches:

- Do not use stiff brushes, steel wool, or cleaners containing abrasives.

Continued

- Avoid riding over or scraping against curbs.

Panels

Follow these guidelines to prevent scratches and blemishes:

- Wash gently using a soft sponge and plenty of water.
- To remove stubborn stains, use diluted detergent and rinse thoroughly with plenty of water.
- Avoid getting gasoline, brake fluid, or detergents on the instruments, panels, or headlight.

Windscreen

Using plenty of water, clean the windscreen with a soft cloth or sponge. (Avoid using detergents or any kind of chemical cleaner on the windscreen.) Dry with a soft, clean cloth.

NOTICE
To avoid possible scratching or other damage, use only water and a soft cloth or sponge to clean the windscreen.

For a dirtier windscreen, use a diluted neutral detergent with a sponge and plenty of water. Make sure to wash off all the detergent. (Detergent residue may cause windscreen cracks.)
Replace the windscreen if scratches cannot be removed and they obstruct clear vision.

Take care to keep battery electrolyte, brake fluid, or other chemical solvents off the windscreen and screen garnish. They will damage the plastic.

Exhaust Pipe and Muffler

When the exhaust pipe and muffler are painted, do not use a commercially available abrasive kitchen cleaning compound. Use a neutral detergent to clean the painted surface on the exhaust pipe and muffler. If you are not sure if your exhaust pipe and muffler are painted, contact your dealer.

Storing Your Vehicle

If you store your vehicle outdoors, you should consider using a full-body cover.
If you won't be riding for an extended period, follow these guidelines:

- Wash your vehicle and wax all painted surfaces (except matte painted surfaces). Coat chrome pieces with rust-inhibiting oil.
- Lubricate the drive chain. ➡ P. 50
- Place your vehicle on a maintenance stand and position a block so that both tires are off the ground.
- After rain, remove the body cover and allow the vehicle to dry.
- Remove the battery (➡ P. 55) to prevent discharge. Fully charge the battery and then place it in a shaded, well-ventilated area.
  ▶ If you leave the battery in place, disconnect the negative ⊖ terminal to prevent discharge.

Continued

After removing your vehicle from storage, inspect all maintenance items required by the Maintenance Schedule.

USA For more information about storage, refer to the *Honda Winter Storage Guide*, available from your dealer.

Canada For more information about storage, visit our website at www.honda.ca and look up “Storage Tips” under the “Honda Warranty” in the Warranty tab for your Model.

Transporting Your Vehicle

If your vehicle needs to be transported, it should be carried on a motorcycle trailer or a flatbed truck or trailer that has a loading ramp or lifting platform, and motorcycle tie-down straps. Never try to tow your vehicle with a wheel or wheels on the ground.

NOTICE
Towing your vehicle can cause serious damage to the transmission.

You & the Environment

Owning and riding a vehicle can be enjoyable, but you must do your part to protect the environment.

Choose Sensible Cleaners

Use a biodegradable detergent when you wash your vehicle. Avoid aerosol spray cleaners that contain chlorofluorocarbons (CFCs) which damage the atmosphere's protective ozone layer.

Recycle Wastes

Put oil and other toxic wastes in approved containers and take them to a recycling center. Call your local or state office of public works or environmental services to find a recycling center in your area, and to get instructions on how to dispose of non-recyclable wastes. Do not place used engine oil in the trash, or pour it down a drain or on the ground. Used oil, gasoline, coolant, and cleaning solvents contain poisons that can hurt refuse workers and contaminate drinking water, lakes, rivers, and oceans.

Vehicle Identification Number

The VIN and engine serial number uniquely identify your vehicle and are required in order to register your vehicle. They may also be required when ordering replacement parts. You should record these numbers and keep them in a safe place.

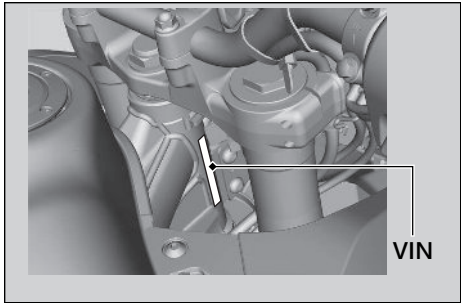

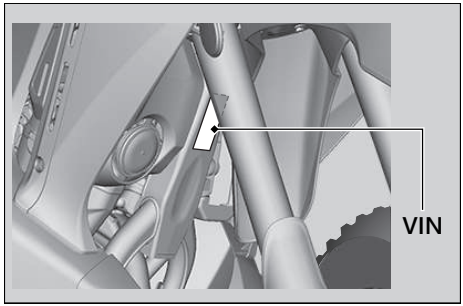

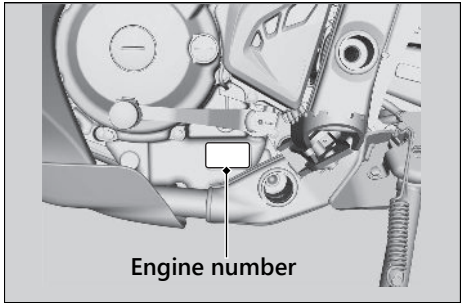

Emission Control Systems

Your vehicle engine emits combustion byproducts, including carbon monoxide (CO), oxides of nitrogen (NOx), and hydrocarbons (HC). Gasoline evaporation also emits hydrocarbons. Controlling the production of NOx, CO, and HC is important for the environment.

Exhaust Emission Requirements

The U.S. Environmental Protection Agency (EPA), the California Air Resources Board (CARB), and Environment and Climate Change Canada (ECCC) require that your vehicle comply with applicable exhaust, crankcase, and fuel permeation emission standards during its useful life, when operated and maintained according to the instructions provided.

CARB also requires that your vehicle comply with applicable evaporative emission requirements during its useful life, when operated and maintained according to the instructions provided.

USA Compliance with the terms of the Distributor's Warranties for Honda Motorcycle Emission Control Systems is necessary in order to maintain a valid emissions system warranty.

The Vehicle Emission Control Information label is attached to the inside of the tool box. ➔ P. 34

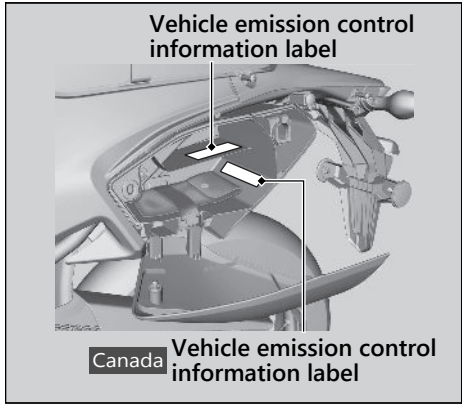

Continued

Noise Emission Requirements

The EPA requires that vehicles built after January 1, 1983 comply with applicable noise emission standards for one year or 3,730 miles (6,000 km) after the time of purchase when operated and maintained according to the instructions provided.

Exhaust Emission Control System

The exhaust emission control system includes the following components that should not need adjustment, although periodic inspection by your dealer is recommended.

PGM-FI System

The PGM-FI (programmed fuel injection) system uses sequential multiport fuel injection, and is comprised of air intake, engine control, fuel control, and exhaust control subsystems. The engine control module (ECM) uses sensors to determine how much air enters the engine, and then controls how much fuel to inject.

Ignition Timing Control System

The ignition timing control system adjusts the ignition timing to reduce the amount of HC, CO, and NOx produced.

Secondary Air Injection System

The secondary air injection system adds filtered air into the exhaust gas to help improve emission control performance.

Catalytic Converters

The exhaust system contains one or more catalytic converters. Catalytic converters use a catalyst to convert most of the harmful exhaust gas compounds into harmless compounds.

Evaporative Emission Control System

50 STATE (meets California)

An evaporative emissions control system uses a canister filled with charcoal to adsorb fuel vapor from the fuel tank while the engine is off. The vapor is drawn into the engine and burned while riding.

Crankcase Emissions Control System

The engine is equipped with a closed crankcase system to prevent discharging crankcase emissions into the atmosphere.
Blow-by gas is returned to the combustion chamber through the air cleaner and throttle body.

Fuel Permeation Emission Control

The fuel tank, fuel hoses, and fuel vapor charge hoses use fuel permeation control technologies to prevent fuel vapor emissions. Tampering with these components to reduce or defeat the effectiveness of the fuel permeation technologies is prohibited.

Noise Emission Control System

TAMPERING WITH THE NOISE CONTROL SYSTEM IS PROHIBITED:

U. S. federal law prohibits, and Canadian provincial laws may prohibit, the following acts or the causing thereof: (1) The removal or rendering inoperative by any person, other than for purposes of maintenance, repair or replacement, of any device or element of design incorporated into any new vehicle for the purpose of noise control prior to its sale or delivery to the ultimate purchaser or while it is in use; or (2) the use of the vehicle after such device or element of design has been removed or rendered inoperative by any person.

Continued

AMONG THOSE ACTS PRESUMED TO CONSTITUTE TAMPERING ARE THE FOLLOWING ACTS:

- Removal of, or puncturing the muffler, baffles, header pipes or any other component which conducts exhaust gases.
- Removal of, or puncturing of any part of the intake system.
- Lack of proper maintenance.
- Removing or disabling any emissions compliance component, or replacing any compliance component with a noncompliant component.

Problems Affecting Vehicle Exhaust Emissions

Have your vehicle inspected and repaired by your dealer if you experience any of the following symptoms:

- Hard starting or stalling after starting
- Rough idling
- Misfiring or backfiring during acceleration
- Poor engine performance and poor fuel economy

Catalytic Converter

This vehicle is equipped with two three-way catalytic converters. Each catalytic converter contains precious metals that serve as catalysts in high temperature chemical reactions that convert hydrocarbons (HC), carbon monoxide (CO), and oxides of nitrogen (NOx) in the exhaust gasses into safe compounds.

A defective catalytic converter contributes to air pollution and can impair your engine's performance. A replacement unit must be an original Honda part or equivalent.

Follow these guidelines to protect your vehicle's catalytic converters.

- Always use unleaded gasoline. Leaded gasoline will damage the catalytic converters.
- Keep the engine in good running condition. A poorly running engine can cause the catalytic converter to overheat causing damage to the converter or the vehicle.
- If your engine is misfiring, backfiring, stalling, or otherwise not running properly, stop riding and turn off the engine. Have your vehicle serviced as soon as possible.

Oxygenated Fuels

Some conventional fuels blended with alcohol or an ether compound are available in some locales to help reduce emissions to meet clean air standards. These gasolines are collectively referred to as oxygenated fuels. If you plan to use oxygenated fuel, check that it is unleaded and meets the minimum octane rating and blend requirement.

The following fuel blends are EPA-approved and have been approved for use in your vehicle:

- Ethanol (ethyl alcohol) up to 10% by volume.
  - ▶ Gasoline containing ethanol may be marketed under the name Gasohol.
- Methanol (methyl alcohol) up to 5% by volume that contain cosolvents and corrosion inhibitors to protect the fuel system. Never use a blend containing more than 5%.

If you accidentally fill your fuel tank with an oxygenated fuel containing higher percentages, you may experience performance problems. To resolve the problem, have your dealer drain the fuel tank and replace with the correct fuel. Fuel system or performance problems resulting from the use of an oxygenated fuel containing higher percentages are not covered by your warranty.

NOTICE

Improper use of oxygenated fuels can damage metal, rubber, and plastic parts of your fuel system.
Oxygenated fuel can also damage paint.
Damage caused by spilled fuel is not covered by warranty.

If you notice any undesirable operating symptoms or performance problems, try a different brand of gasoline.

Authorized Manuals

USA The Service Manual used by your authorized dealer is available from your Honda dealer or Helm, Inc.
Canada See your dealer to order authorized manuals.

Also available, but not necessary to service your model, is the Honda Common Service Manual, which explains basic service information for various systems on Honda motorcycles, scooters, and ATV.
USA The Winter Storage Guide in conjunction with the Owner's Manual and Service Manual can help you prepare your Honda motorcycle, scooter, ATV, and SxS for winter storage.

These Honda manuals are written for the professional technician. However, if you possess the proper tools, observe the safety standards, and are mechanically capable, you should find them easy to use.
Special Honda tools are necessary for some procedures.

USA
Order online: www.helminc.com

Order Toll Free: 1-888-CYCLE93
(1-888-292-5393)
(NOTE: For Credit Card Orders Only)
Monday - Friday 8:00 AM - 6:00 PM EST

Publication Item No.	Description
61KZZ53	2020 CRF250L/LA/RL/RLA Service Manual
61CSM00	Common Service Manual
S9507	USA Winter Storage Guide
31KZZC30	2020 CRF250RL/RLA Owner’s Manual

Warranty Coverage and Service

Coverage

Your new Honda is covered by the following warranties:

- Vehicle Limited Warranty
- Emission Control System Warranty
- USA Noise Control Warranty

The responsibilities, restrictions, and exclusions that apply to these warranties are explained in the Warranties Booklet given to you by your Honda dealer at the time of purchase. Always keep your Honda owner's card with your Warranties Booklet.
Canada Please refer to the Warranty Booklet posted on our website at www.honda.ca.

It is important to realize that your warranty applies only to defects in material or workmanship of your Honda. Your warranty coverage does not apply to the normal wear and deterioration associated with use of the vehicle.

Your warranty coverage is not voided if you perform your own maintenance. However, failures that occur due directly to improper maintenance are not covered by these warranties.

USA You can extend almost all of your warranty coverage through the Honda Protection Plan. For more information, see your Honda dealer.

Service

Please remember that maintenance recommended in the Maintenance Schedule is not included in your warranty coverage.

If you believe you have a problem with your vehicle, call the service department of your Honda dealer. Make an appointment for an inspection and diagnosis. You will be asked to authorize that inspection, and your dealer will return the results of the inspection. If a problem exists and is covered under warranty, your dealer will perform the warranty repairs. If you have any questions about your warranty coverage or the nature of the repair, talk to the Service Manager of your Honda dealer.

If a misunderstanding occurs and you aren't satisfied with your dealer's handling of the situation, we suggest you discuss your problem with the appropriate member of the dealership's management team. If you are still not satisfied, contact the owner of the dealership or their designated representative.

Honda Contacts

American Honda Motor Co., Inc.

If you wish to contact Honda directly to comment on your experiences with your vehicle or with your dealer, please send your comments to the following address:

Motorcycle Division,
American Honda Motor Co., Inc.,
P.O. Box 2200, Torrance,
CA 90509-2200
Mailstop: 100-4C-7B,
Telephone: (866) 784-1870.

Canada

Honda Canada Inc.
Customer Relations Department,
180 Honda Boulevard
Markham, Ontario
L6C 0H9
Telephone: (888) 946-6329
Fax: (877) 939-0909
E-mail: honda_cr@ch.honda.com

Please include the following information in your letter:

- Name, address, and telephone number
- Product model, year, and VIN
- Date of purchase
- Dealer name and address

We will likely ask your Honda dealer to respond, or possibly acknowledge your comments directly.

Your Honda Dealer

The service department of your Honda dealer offers trained personnel to perform regular maintenance and most repairs. It has the latest available service information from Honda and also handles warranty inspections and repairs.

The parts department offers Honda Genuine Parts, Pro Honda products, Honda Genuine Accessories (USA only), and Honda accessories and products (Canada only) that provide the same quality that went into your vehicle.

USA The sales department offers the Honda Protection Plan to extend almost all of your warranty coverage.

Your Honda dealer can also supply information about, riding events, and information about safety training available in your local area.

USA Reporting Safety Defects

If you believe that your vehicle has a defect which could cause a crash or could cause injury or death, you should immediately inform the National Highway Traffic Safety Administration (NHTSA) in addition to notifying American Honda Motor Co., Inc.

If NHTSA receives similar complaints, it may open an investigation, and if it finds that a safety defect exists in a group of vehicles, it may order a recall and remedy campaign. However, NHTSA cannot become involved in individual problems between you, your dealer, or American Honda Motor Co., Inc.

To contact NHTSA, you may call the Vehicle Safety Hotline toll-free at:
1-888-327-4236
(TTY: 1-800-424-9153); go to *http://www.safercar.gov;*
or write to:
Administrator, NHTSA,
1200 New Jersey Avenue, SE.,
Washington, DC 20590.
You can also obtain other information about motor vehicle safety from: *http://www.safercar.gov*.

Main Components

Overall length	87.0 in (2,210 mm)
Overall width	35.4 in (900 mm)
Overall height	56.1 in (1,425 mm)
Wheelbase	57.3 in (1,455 mm)
Minimum ground clearance	10.6 in (270 mm)
Caster angle	28.1°
Trail	4.5 in (114 mm)
Curb weight	**CRF250RL** 342 lb (155 kg)
	CRF250RLA 346 lb (157 kg)
Maximum weight capacity *1	320 lb (145 kg)
Passenger capacity	Rider and 1 passenger
Minimum turning radius	7.5 ft (2.29 m)
Displacement	15.3 cu-in (250 cm^3)
Bore x stroke	2.99 x 2.17 in (76.0 x 55.0 mm)
Compression ratio	10.7:1
Fuel	Unleaded gasoline Recommended: 86 PON or higher
Tank capacity	2.67 US gal (10.1 L)
Battery	YTZ8V 12 V-7.0 Ah (10 HR)

Gear ratio	1st	3.333
	2nd	2.117
	3rd	1.571
	4th	1.304
	5th	1.103
	6th	0.967
Reduction ratio (primary / final)	2.807 / 2.857	

*1 : Including rider, passenger, all luggage, and accessories.

Service Data

Tire size	Front	3.00-21 51P
	Rear	120/80-18M/C 62P
Tire type		Bias-ply, tube
Recommended Tire	Front	IRC GP-21F Z
	Rear	IRC GP-22R
Tire air pressure (Driver only)	Front	22 psi (150 kPa, 1.50 kgf/cm^2)
	Rear	22 psi (150 kPa, 1.50 kgf/cm^2)
Tire air pressure (Driver and passenger)	Front	22 psi (150 kPa, 1.50 kgf/cm^2)
	Rear	25 psi (175 kPa, 1.75 kgf/cm^2)
Minimum tread depth	Front	0.12 in (3.0 mm)
	Rear	0.12 in (3.0 mm)
Spark plug	(standard)	SIMR8A9 (NGK)
Spark plug gap	(non-adjustable)	0.03 - 0.04 in (0.8 - 0.9 mm)
Idle speed	(non-adjustable)	1,450 ± 100 rpm
Recommended engine oil	Honda 4-stroke motorcycle oil API Service Classification SG or higher, excluding oils marked as "Energy Conserving" or "Resource Conserving" SAE 10W-30, JASO T 903 standard MA	

Engine oil capacity	After draining	1.5 US qt (1.4 L)
	After draining & filter change	1.6 US qt (1.5 L)
	After disassembly	1.9 US qt (1.8 L)
Recommended brake fluid	Honda DOT 3 or DOT 4 Brake Fluid	
Cooling system capacity	1.08 US qt (1.02 L)	
Recommended coolant	Pro Honda HP Coolant	
Drive chain slack	1.6 - 2.0 in (40 - 50 mm)	
Recommended drive chain lubricant	Pro Honda HP Chain Lube or equivalent	
Standard drive chain	DID 520VF	
	No. of links	106
Standard sprocket size	Drive sprocket	14T
	Driven sprocket	40T

Bulbs

Headlight	LED
Brake light / Taillight	12 V-21 / 5 W
Front turn signal light / Position light	12 V-21 / 5 W x 2
Rear turn signal light	12 V-21 W x 2
License plate light	LED

Fuses

Main fuse		30 A
Other fuse	**CRF250RL**	20 A, 10 A
	CRF250RLA	30 A, 20 A, 10 A

Torque Specifications

Hook bolt	15 lbf·ft (21 N·m, 2.1 kgf·m)
Engine oil drain bolt	18 lbf·ft (24 N·m, 2.4 kgf·m)
Oil filter cover bolt	7 lbf·ft (10 N·m, 1.0 kgf·m)
Front axle shaft	51 lbf·ft (69 N·m, 7.0 kgf·m)
Front wheel axle pinch bolt	16 lbf·ft (22 N·m, 2.2 kgf·m)
Rear axle nut	65 lbf·ft (88 N·m, 9.0 kgf·m)
Drive chain adjusting lock nut	20 lbf·ft (27 N·m, 2.8 kgf·m)
Tail cap cover bolt	3.9 lbf·ft (5.25 N·m, 0.5 kgf·m)
Spark arrester mounting bolt	6.6 lbf·ft (9.0 N·m, 0.9 kgf·m)
Muffler cover bolt	1.1 lbf·ft (1.5 N·m, 0.2 kgf·m)

Information Record

VIN	
Engine No.	
Color Label & Code	
Owner's Name	
Address	
City/State	
Phone	
Dealer's Name	
Address	
City/State	
Phone	
Service Manager	

Index

A

ABS (Anti-lock Brake System) 12
ABS (Anti-lock Brake System) Indicator 25, 90
ABS function on the rear wheel 29
Accessories 15
Air Cleaner 68
Authorized Manuals 123

B

Battery 46, 55, 129
Brake Light Switch 73
Brakes
- Fluid 50, 71, 130
- Pad Wear 72

Braking 11
Bulb
- Brake light/Taillight 99
- Headlight 99
- License Plate Light 101
- Turn Signal 100

C

Clock 21, 22
Clutch
- Adjusting 82
- Freeplay 81

Color Label 45
Coolant 69
Crankcase Breather 85
Crash 5

D

Drive Chain 50, 75
Drive Chain Slider 79

E

Electrical Trouble 98
Emission Control Systems 117

Engine
Idle Speed 39
Number 116
Oil 49, 64
Oil Filter 66
Overheats 89
Starting 30
Stop Switch 27, 109
Stopping 109
Will Not Start 88

F
Flooded Engine 30
Fuel
Gauge 21
Recommended 32
Tank Capacity 32
Fuses 48, 102

G
Gasohol 122
Gasoline 32

H
Hazard Switch 26
Headlight Aim 86
Headlight Dimmer Switch 26
Helmet Holder 33
High Beam Indicator 25
High Coolant Temperature Indicator ... 25, 89
Honda Contacts 126
Horn Button 26

I
Ignition Cut-off System
Banking Sensor 109
Ignition Key 108
Ignition Switch 27, 109
Indicators 24
Information Record 132
Instruments, Controls, & Other Features 109

K
Keys 108

L
Labels 7
Load Limits 17
Loading Guidelines 17

M
Maintenance
Fundamentals 42
Importance 36
Record 41
Safety 37
Schedule 38
Maximum Weight Capacity 17, 129
Modifications 15

N
Neutral Indicator 24

O
Odometer 21, 109
Oil
Engine 49, 64
Overheating 89
Oxygenated Fuels 122

P
Parking 13
Parts Location 18
PGM-FI (Programmed Fuel Injection) Malfunction Indicator Lamp (MIL) 24, 90
Protective Apparel 9

R
Rear ABS (Anti-lock Brake System) OFF Indicator 24
Rear ABS switch 27, 29
Recommended
Coolant 51
Engine Oil 49, 130
Fuel 32
Oil 49
Refueling 32
Removal
Battery 55
Seat 56
Side Cover 57
Under Cowl 58
Reporting Safety Defects 128
Riding Precautions 11

S
Safety Guidelines 3
Safety Labels 7
Safety Precautions 9
Shifting Gears 31
Side Stand 74
Spark Arrester 62
Spark Plug 59
Specifications 129
Speedometer 21
Start Button 27
Starting the Engine 30
Steering Lock 28
Stopping Engine 109
Storage
Equipment 33
Owner's Manual 34
Tool Kit 34
Storing 113
Switches 26

T
Tachometer 20
Throttle 84
Tires
Air Pressure 52
Puncture 92
Replacing 52, 92
Transporting 114
Tripmeter 21, 109
Troubleshooting 87
Turn Signal Indicators 25
Turn Signal Switch 26

V
Vehicle Identification Number 116

W
Warranty Coverage and Service 124
Washing 110
Weight Limit 17, 129
Wheels
Front Removal 93
Rear Removal 95
Rims & Spokes 80

California Proposition 65 Warning

⚠**WARNING:** Operating, servicing and maintaining a passenger vehicle or off-highway motor vehicle can expose you to chemicals including engine exhaust, carbon monoxide, phthalates, and lead, which are known to the State of California to cause cancer and birth defects or other reproductive harm. To minimize exposure, avoid breathing exhaust, do not idle the engine except as necessary, service your vehicle in a well-ventilated area and wear gloves or wash your hands frequently when servicing your vehicle. For more information go to www.P65Warnings.ca.gov/passenger-vehicle.